Accessories & Options

Chain Slack Prevention Valve



The Auramo Chain Slack Prevention Valve reduces paper roll damage by preventing slack in the lift mast chains.

If paper rolls are handled without a Chain Slack Prevention Valve, there is a possibility that the roll and clamp could be lowered too far, causing slack in the mast chains.

When the clamping arms are opened, the clamp falls free until the chains become tight again. The result being damage to the paper rolls, as well as the fork lift truck's steer axle, mast and chains.

The Chain Slack Prevention Valve inhibits chain slack by stopping the mast's downward movement immediately after the load is taken off the lift cylinder.

The Auramo Chain Slack Prevention Valve is highly responsive, dirt tolerant and has a leak-proof seat design.

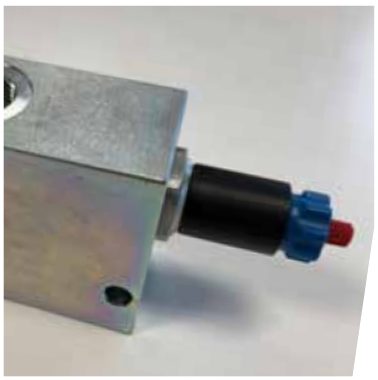



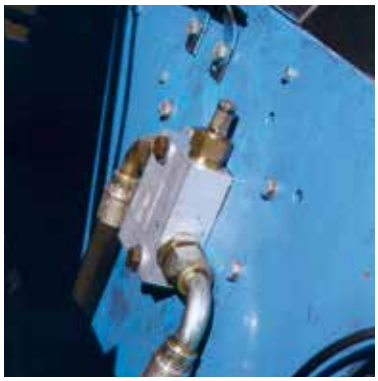



AURAMO

Chain Slack Prevention Valve

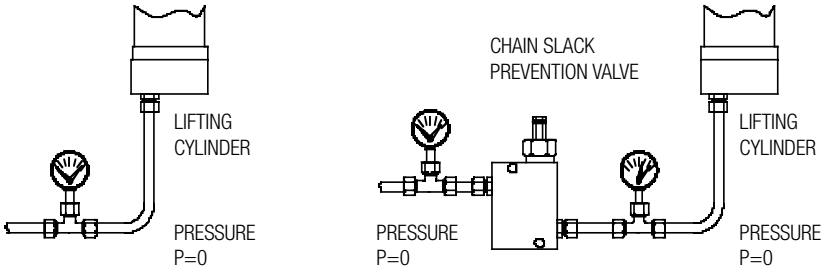

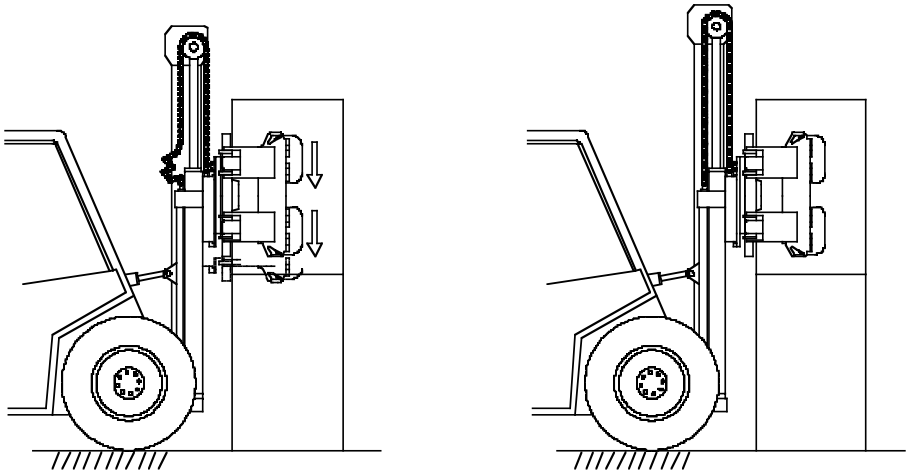

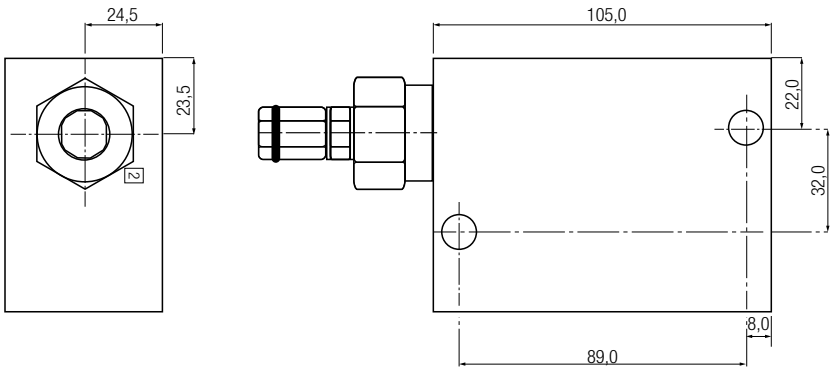

Mounting

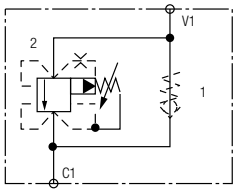

Pressure curve

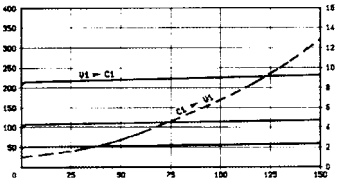

Technical Specifications:

Order code	CSPV2 : Standard version* CSPV2-MC : Version with manual override
Standard pressure setting range	1.0 - 7.0 MPa (10 - 70 bar)
Maximum oil flow	150 l/min
Assembly	See figure above. The valve can be assembled in any position. Use wide diameter hoses to avoid pressure loss.
Port size	C1 = ¾" V1 = ¾ "
Weight:	1.1 kg
Please consult Auramo for the functionality with specific lift mast model	

(*) For some applications the truck needs to be capable of switching attachments and in that case, the standard version is not suitable. The issue is that, the mast would not lower when the attachment is taken off and therefore, a manual override is needed.

CERTIFIED ISO 9001 MANUFACTURER

79001378_0219

BOLZONI S.p.A.
VIA I MAGGIO, 103 - I CASONI 29027 PODENZANO - PIACENZA (ITALIA)
TEL. +39 0523 555511

www.bolzonigroup.com - sales.it@bolzonigroup.com

BOLZONI GROUP