Four-Stage Pressure Relief Valve

Electrical operation

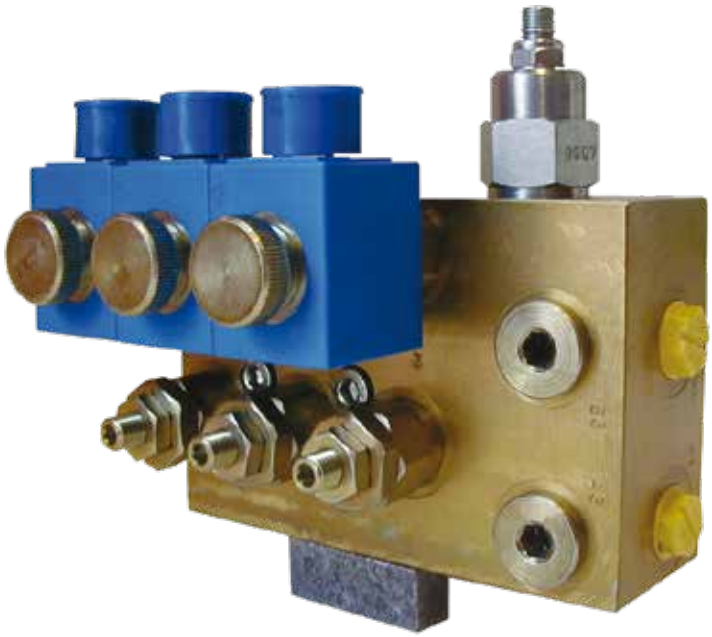

The four-stage pressure relief valve is recommended on clamp attachments handling loads sensitive to clamping forces.

The valve reduces load damage by ensuring easy and fast clamping pressure selection.

A wide variety of applications can be found in paper roll, carton, box and white-ware handling.

Electrically controlled, the four-stage pressure relief valve allows the use at four different pre-set clamping pressure levels, enabling easy clamping force adjustments with varying load weights and unit sizes.

Easy and user-friendly pressure setting using a cabin-mounted rotary switch. The rugged and well proven design together with the wide oil flow and pressure ranges, make this valve suitable for all applications.

The valve is mounted into the auxiliary hydraulic lines between the lift truck and the attachment. Several mounting configurations are possible.

Electrically controlled four-stage pressure-relief valve can be used in combination with the optional pressure-control lights. Red, amber, green and blue lights in the tower indicate the selected pressure setting.









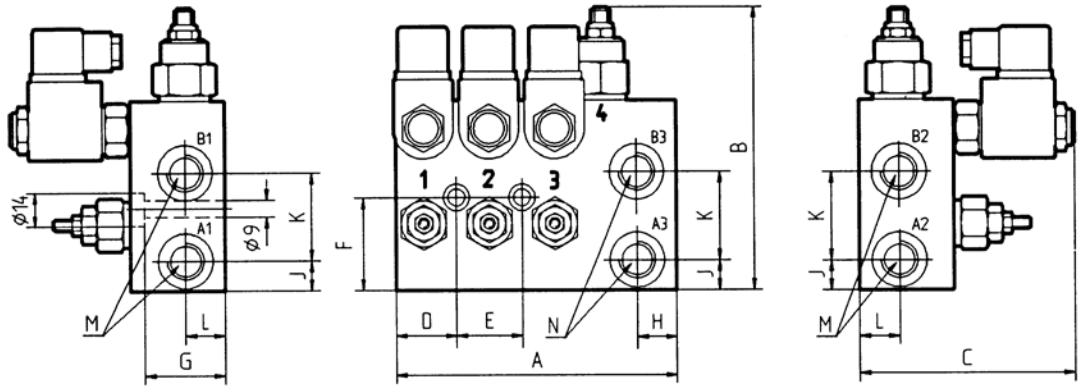

Type	Voltage	Flow Rate	Pressure	A	B	C	D	E	F	G	H	J	K	L	M	N
		l/min	MPa	mm	mm	mm	mm	mm	mm	mm	mm	mm	mm	mm	ISO 6149	ISO 6149
426778.12 426778.24	12 VDC 24 VDC	20-120	3.0-20.0	150	150	115	33	35	46	42	21	16	45	21	M18X1.5	M18X1.5
426779.12 426779.24	12 VDC 24 VDC	20-240	3.0-20.0	175	190	128	36	35	62	52	37	24	58	29	M18X1.5	1" BSPP

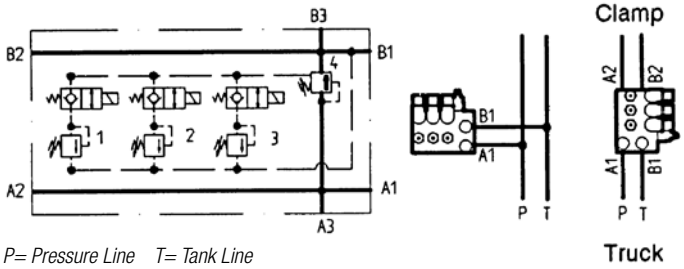

P= Pressure Line T= Tank Line

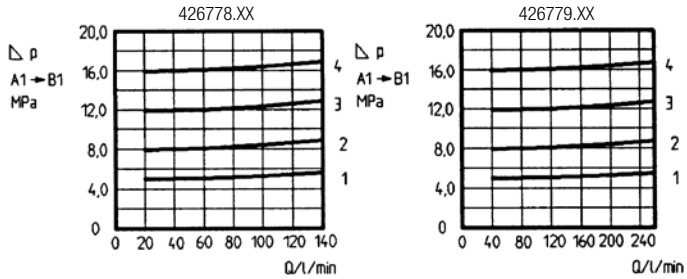

Technical specifications:

- Order code: see table above. The delivery includes valve, operation switch and all cables between the valve and switch.
- Standard pressure setting: there are four pre-set operation pressures. Standard pressures are preset at the factory at a flow rate of 60 l/min (16 GPM). See pressure curves above for settings at other oil flow rates. The pressure curves show pressure differences between the pressure and tank lines inside the valve.
- Maximum connection pressure: 25.0 MPa (250 bar / 3600 psi)
- Assembly: see figure above for various assembly configurations. The valve can be assembled in any position. Use wide- diameter hoses to avoid pressure loss.

Standard Pressure Settings	
Pos.	ΔP = Pp - Pt
1	5.0 MPa (50 bar / 725 psi)
2	8.0 MPa (80 bar / 1,160 psi)
3	12.0 MPa (120 bar / 1,740 psi)
4	16.0 MPa (160 bar / 2,320 psi)

Options:

- Pressure control lights:
  420565.12 > operation voltage 12 V DC, cable included
  420565.24 > operation voltage 24 V DC, cable included.
- Pressure gauge:
  610002 > gauge delivery does not include fittings or hoses.

CERTIFIED ISO 9001 MANUFACTURER

79BA0050E - 0514

BOLZONI S.p.A.
VIA I MAGGIO, 103 - I CASONI 29027 PODENZANO - PIACENZA (ITALIA)
TEL. +39 0523 555511

www.bolzonigroup.com - sales.it@bolzonigroup.com

BOLZONI GROUP