Four-Stage Pressure Relief Valve

Manual operation



The four-stage pressure relief valve is recommended on clamp attachments handling loads sensitive to clamping forces.
The valve reduces load damage by ensuring easy and fast clamping pressure selection.
A wide variety of applications can be found in paper roll, carton, box and white-ware handling.

Manually controlled, the four-stage pressure relief valve allows the use at four different pre-set clamping pressure levels, enabling easy clamping force adjustments with varying load weights and unit sizes.

Manual pressure setting is made simple by using a large control lever. The rugged design and the small size together with the wide oil flow and pressure ranges, make this valve suitable for all applications.

The valve is mounted into the auxiliary hydraulic lines between the lift truck and the attachment. Several mounting configurations are possible.

The valve should be positioned in a location, which allows easy access to the operation lever. Typical assembly locations are the lift truck cowling or the cab facia.

Optional pressure gauge enables easy clamping force monitoring.





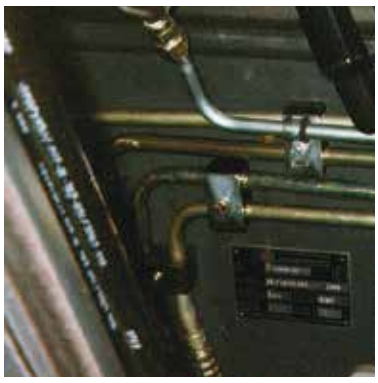



Four-Stage Pressure Relief Valve

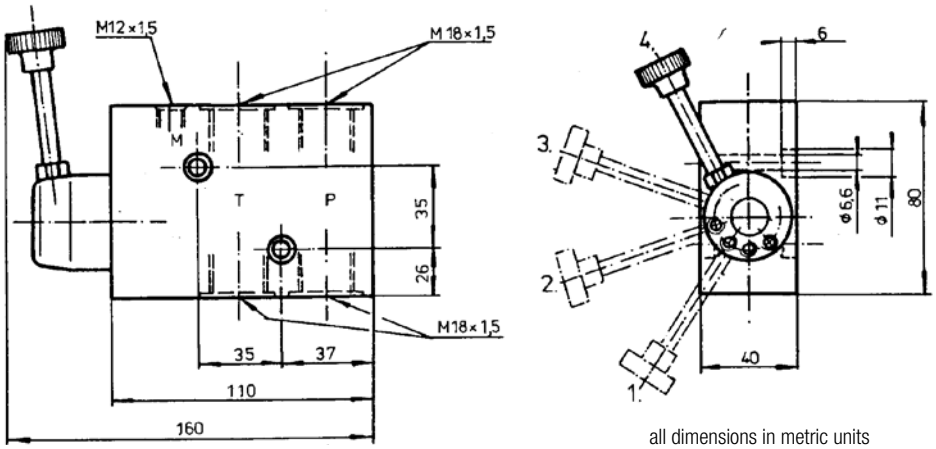

all dimensions in metric units

Hydraulic Diagram:

P= Pressure Line
T= Tank Line

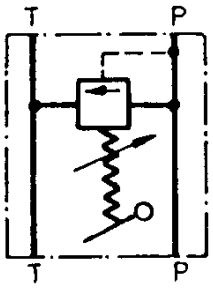

Possible Mounting Configurations:

P= Pressure Line
T= Tank Line

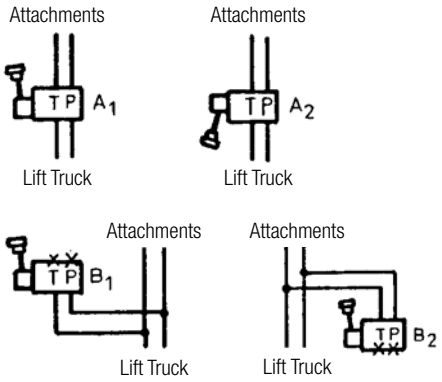

Pressure Curves:

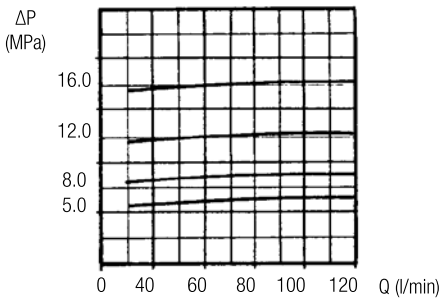

Technical specifications:

- Order code: 401900
- Flow range: 25 – 120 l/min (7-32 GPM)
- Pressure control range: 2.0 – 18.0 MPa (20 – 180 bar / 290 – 2600 psi)
- Max connection pressure: 25.0 MPa (250 bar / 3600 psi)
- Standard pressure setting: Adjusted to a oil flow rate of 60 l/min (16 GPM). See pressure curves above for settings at other oil flow rates. The pressure curves show pressure differences between the pressure and tank lines inside the valve. Maximum pressure difference between adjacent pressure settings is 5.0 MPa (50 bar / 730 psi).
- Weight: 2.6 kg (5.7 lbs)
- Assembly: See figure above for various assembly configurations. The valve can be assembled in any position. If assembly configurations B1 or B2 are chosen, use wide-diameter hoses to avoid pressure loss.

Standard Pressure Settings

Pos.	ΔP = Pp - Pt
1	5.0 MPa (50 bar / 725 psi)
2	8.0 MPa (80 bar / 1,160 psi)
3	12.0 MPa (120 bar / 1,740 psi)
4	16.0 MPa (160 bar / 2,320 psi)

Options:

- Gauge assembly:
  416862 > Includes a pressure gauge and all fittings required to connect the gauge into the 4-stage pressure relief valve.
  Note: The gauge is connected to the port M. Note that the gauge shows the pressure difference between the pressure and tank lines inside the valve. Avoid small-diameter hoses and pipes causing pressure loss.

CERTIFIED ISO 9001 MANUFACTURER

79BA0049E - 0514

BOLZONI S.p.A.
VIA I MAGGIO, 103 - I CASONI 29027 PODENZANO - PIACENZA (ITALIA)
TEL. +39 0523 555511

www.bolzonigroup.com - sales.it@bolzonigroup.com

BOLZONI GROUP