Paper Roll Clamps

Models AMR-F / AMR-P

Bolzoni Auramo Series AMR 360-degree rotating paper roll clamps have been designed for vertical and horizontal handling of 1-2 paper rolls.

Pivoting arm movement. Short and long arms. Non-split long arm for single roll handling. Split long arm for 1-2 roll handling. Thin arm design enables paper roll handling also in confined spaces.

Models AMR-RF: Fixed short arm integrated in the clamp body.

Models AMR-RH: Hydraulically positionable short arm with wider roll diameter range. Hydraulic short arm positioning mechanism is activated at 45-degree clamp rotation angle. Optional fixed short arm versions available.

A well-proven and fast 360-degree rotator increases handling efficiency.

Simple and robust design makes the series AMR paper roll clamps easy to service.

Several contact pad and mounting options available on request. As standard the clamps are delivered with short high-friction cast contact pads.

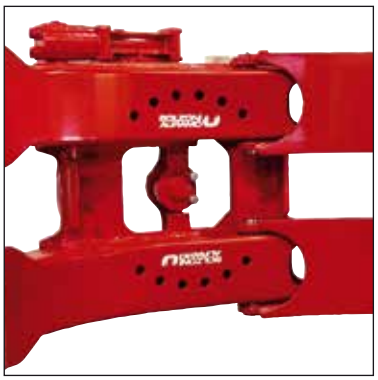

BOLZONI AURAMO

Paper Roll Clamps, 360-degree Rotation

Models AMR-F

AMR-F

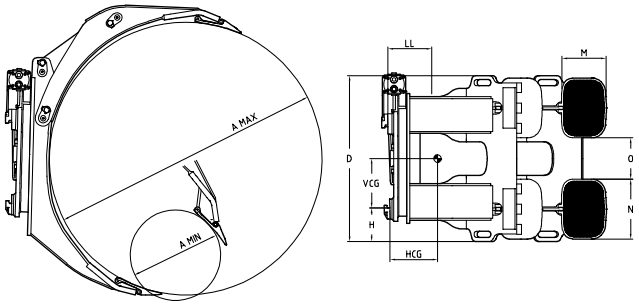

Range: 3,500 - 4,500 Lbs.

- 360-degree rotating paper roll clamp for vertical and horizontal handling of 1-2 paper rolls.
- Pivoting arm movement. Short and long arms. Non-split long arm for single roll handling. Split long arm for 1-2 roll handling.
- Models AMR-F: Fixed short arm integrated in the clamp body.
- A well-proven and fast 360-degree rotator increases handling efficiency.
- Simple and robust design makes the series AMR paper roll clamps easy to service.
- Several contact pad and mounting options available on request.
- Mounting angle 1,5 degrees.

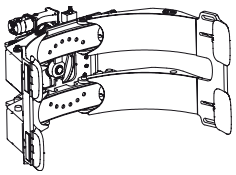

Unsplit long arm

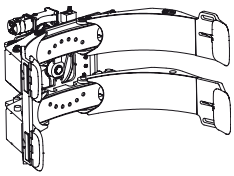

Split long arm

Model	Capacity Lbs.	Load Center	Roll Range	Height	Weight Lbs.	Horizontal Center of Gravity	Vertical Center of Gravity	Effective Thickness	Contact Pads	Contact Pad Gap	Mounting Height	Mounting Class
	Q	*BP*	*A*	*D*	*W*	*HCG*	*VCG*	*LL*	*M x N*	*O*	*H*	
Single roll clamps - Unsplit long arm - Fixed short arm - Fixed Frame												
AMR-40-1853-F-II	4,000	26.5''	18"-53"	32.7''	1,170	11.4''	10.4''	7.0''	8.7" x 11.8"	7.9	6.5''	II
AMR-40-1853-F-III	4,000	26.5''	18"-53"	32.7''	1,220	12.0''	12.0''	8.2''	8.7" x 11.8"	7.9	4.8''	III
AMR-45-1853-F-II	4,500	26.5''	18"-53"	32.7''	1,180	11.4''	10.4''	7.0''	8.7" x 11.8"	7.9	6.5''	II
AMR-45-1853-F-III	4,500	26.5''	18"-53"	32.7''	1,230	12.0''	12.0''	8.2''	8.7" x 11.8"	7.9	4.8''	III
1 - 2 roll clamps - Split long arm - Fixed short arm - Fixed Frame												
AMR-40-1853-FS-II	4,000	26.5''	18"-53"	32.7''	1,160	11.4''	10.4''	7.0''	8.7" x 11.8"	7.9	6.5''	II
AMR-40-1853-FS-III	4,000	26.5''	18"-53"	32.7''	1,210	12.0''	12.0''	8.2''	8.7" x 11.8"	7.9	4.8''	III
AMR-45-1853-FS-II	4,500	26.5''	18"-53"	32.7''	1,170	11.4''	10.4''	7.0''	8.7" x 11.8"	7.9	6.5''	II
AMR-45-1853-FS-III	4,500	26.5''	18"-53"	32.7''	1,220	12.0''	12.0''	8.2''	8.7" x 11.8"	7.9	4.8''	III

Notes:

- Two hydraulic functions.
- See hydraulic pressure and flow rate recommendations.
- Standard contact pads: cast pad with high-friction surface.
- For 0-degree tilt special arms are available. Consult Bolzoni Auramo.

Options:

- Contact pad options:
  - steel-sprayed
  - rubber faced
  - polyurethane faced
  - other contact pad friction surfaces
  - full length contact pads.

Paper Roll Clamps, 360-degree Rotation

Models AMR-P

AMR-P

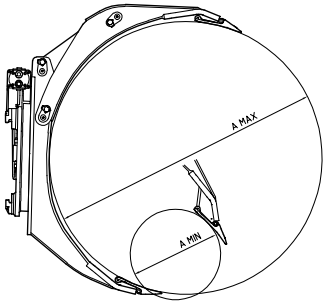

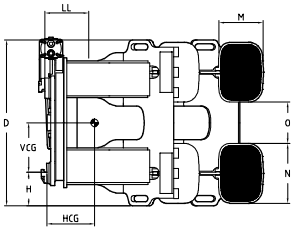

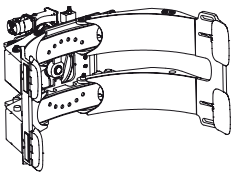

Unsplit long arm

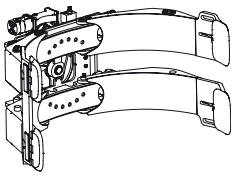

Split long arm

Range: 3,500 - 6,100 Lbs.

- 360-degree rotating paper roll clamp for vertical and horizontal handling of 1-2 paper rolls.
- Pivoting arm movement. Short and long arms. Non-split long arm for single roll handling. Split long arm for 1-2 roll handling.
- Models AMR-P: Hydraulically positionable short arm with wider roll diameter range. Hydraulic short arm positioning mechanism is activated at 45-degree clamp rotation angle. Optional fixed short arm versions available.
- A well-proven and fast 360-degree rotator increases handling efficiency.
- Simple and robust design makes the series AMR paper roll clamps easy to service.
- Several contact pad and mounting options available on request.
- Mounting angle 1,5 degrees.

Model	Capacity Lbs.	Load Center	Roll Range	Height	Weight Lbs.	Horizontal Center of Gravity	Vertical Center of Gravity	Effective Thickness	Minimum Carriage Width	Contact Pads	Contact Pad Gap	Mounting Height	Mounting Class
	Q	*BP*	*A*	*D*	*W*	*HCG*	*VCG*	*LL*	*FL*	*M x N*	*O*	*H*	
Single roll clamps - Unsplit long arm - Positioned or fixed short arm													
AMR-40-1053-P-II	4,000	26.5”	10"-53"	32.7”	1,310	11.8”	10.4”	7.0”	29.5”	8.7"x11.8"	7.9	6.5”	II
AMR-40-1053-P-III	4,000	26.5”	10"-53"	32.7”	1,370	12.4”	12.0”	8.2”	29.5”	8.7"x11.8"	7.9	4.8”	III
AMR-40-1060-P-II	3,500	30.0”	10"-60"	32.7”	1,380	13.0”	10.4”	7.0”	29.5”	8.7"x11.8"	7.9	6.5”	II
AMR-40-2060-F-II	3,500	30.0”	20"-60"	32.7”	1,370	13.0”	10.4”	7.0”	29.5”	8.7"x11.8"	7.9	6.5”	II
AMR-40-1060-P-III	3,500	30.0”	10"-60"	32.7”	1,430	13.6”	12.0”	8.2”	29.5”	8.7"x11.8"	7.9	4.8”	III
AMR-40-2060-F-III	3,500	30.0”	20"-60"	32.7”	1,420	13.6”	12.0”	8.2”	29.5”	8.7"x11.8"	7.9	4.8”	III
AMR-45-1053-P-II	4,500	26.5”	10"-53"	32.7”	1,320	11.8”	10.4”	7.0”	29.5”	8.7"x11.8"	7.9	6.5”	II
AMR-45-1053-P-III	4,500	26.5”	10"-53"	32.7”	1,380	12.4”	12.0”	8.2”	29.5”	8.7"x11.8"	7.9	4.8”	III
AMR-45-1060-P-II	4,000	30.0”	10"-60"	32.7”	1,390	13.0”	10.4”	7.0”	29.5”	8.7"x11.8"	7.9	6.5”	II
AMR-45-2060-F-II	4,000	30.0”	20"-60"	32.7”	1,380	13.0”	10.4”	7.0”	29.5”	8.7"x11.8"	7.9	6.5”	II
AMR-45-1060-P-III	4,000	30.0”	10"-60"	32.7”	1,440	13.6”	12.0”	8.2”	29.5”	8.7"x11.8"	7.9	4.8”	III
AMR-45-2060-F-III	4,000	30.0”	20"-60"	32.7”	1,430	13.6”	12.0”	8.2”	29.5”	8.7"x11.8"	7.9	4.8”	III
AMR-60-1053-P-III	6,100	26,5”	10"-53"	40,2”	1,690	12,4”	13.4”	7.7”	36.6”	9.4"x15.7"	7.9	7.6”	III
AMR-60-1060-P-III	5,200	30,0”	10"-60"	40,2”	1,730	13,2”	13.4”	7.7”	36.6”	9.4"x15.7"	7.9	7.6”	III
AMR-60-1063-P-III	5,000	31,5”	10"-63"	40,2”	1,750	13,6”	13.4”	7.7”	36.6”	9.4"x15.7"	7.9	7.6”	III
AMR-66-1053-P-III	7,000	26,5”	10"-53"	40,2”	1,720	12,4”	13.4”	7.7”	36.6”	9.4"x15.7"	7.9	7.6”	III
AMR-66-1060-P-III	6,600	30,0”	10"-60"	40,2”	1,760	13,2”	13.4”	7.7”	36.6”	9.4"x15.7"	7.9	7.6”	III
AMR-66-1063-P-III	6,100	31,5”	10"-63"	40,2”	1,780	13,6”	13.4”	7.7”	36.6”	9.4"x15.7"	7.9	7.6”	III

Paper Roll Clamps, 360-degree Rotation

Models AMR-P

Model	Capacity Lbs.	Load Center	Roll Range	Height	Weight Lbs.	Horizontal Center of Gravity	Vertical Center of Gravity	Effective Thickness	Minimum Carriage Width	Contact Pads	Contact Pad Gap	Mounting Height	Mounting Class
	Q	*BP*	*A*	*D*	*W*	*HCG*	*VCG*	*LL*	*FL*	*M x N*	*O*	*H*	
1 - 2 roll clamps - Split long arm - Positioned or fixed short arm													
AMR-40-1053-PS-II	4,000	26.5”	10"-53"	32.7”	1,300	11.8”	10.4”	7.0”	29.5”	8.7"x11.8"	7.9	6.5”	II
AMR-40-1053-PS-III	4,000	26.5”	10"-53"	32.7”	1,350	12.4”	12.0”	8.2”	29.5”	8.7"x11.8"	7.9	4.8”	III
AMR-40-1060-PS-II	3,500	30.0”	10"-60"	32.7”	1,370	13.0”	10.4”	7.0”	29.5”	8.7"x11.8"	7.9	6.5”	II
AMR-40-2060-FS-II	3,500	30.0”	20"-60"	32.7”	1,350	13.0”	10.4”	7.0”	29.5”	8.7"x11.8"	7.9	6.5”	II
AMR-40-1060-PS-III	3,500	30.0”	10"-60"	32.7”	1,420	13.6”	12.0”	8.2”	29.5”	8.7"x11.8"	7.9	4.8”	III
AMR-40-2060-FS-III	3,500	30.0”	20"-60"	32.7”	1,410	13.6”	12.0”	8.2”	29.5”	8.7"x11.8"	7.9	4.8”	III
AMR-45-1053-PS-II	4,500	26.5”	10"-53"	32.7”	1,310	11.8”	10.4”	7.0”	29.5”	8.7"x11.8"	7.9	6.5”	II
AMR-45-1053-PS-III	4,500	26.5”	10"-53"	32.7”	1,370	12.4”	12.0”	8.2”	29.5”	8.7"x11.8"	7.9	4.8”	III
AMR-45-1060-PS-II	4,000	30.0”	10"-60"	32.7”	1,380	13.0”	10.4”	7.0”	29.5”	8.7"x11.8"	7.9	6.5”	II
AMR-45-2060-FS-II	4,000	30.0”	20"-60"	32.7”	1,370	13.0”	10.4”	7.0”	29.5”	8.7"x11.8"	7.9	6.5”	II
AMR-45-1060-PS-III	4,000	30.0”	10"-60"	32.7”	1,430	13.6”	12.0”	8.2”	29.5”	8.7"x11.8"	7.9	4.8”	III
AMR-45-2060-FS-III	4,000	30.0”	20"-60"	32.7”	1,420	13.6”	12.0”	8.2”	29.5”	8.7"x11.8"	7.9	4.8”	III
AMR-60-1053-PS-III	6,100	26.5”	10"-53"	40.2”	1,650	12.0”	13.4”	7.7”	36.6”	9.4"x15.7"	7.9	7.6”	III
AMR-60-1060-PS-III	5,200	30.0”	10"-60"	40.2”	1,700	12.8”	13.4”	7.7”	36.6”	9.4"x15.7"	7.9	7.6”	III
AMR-60-1063-PS-III	5,000	31.5”	10"-63"	40.2”	1,720	13.2”	13.4”	7.7”	36.6”	9.4"x15.7"	7.9	7.6”	III
AMR-66-1053-PS-III	7,000	26.5”	10"-53"	40.2”	1,690	12.0”	13.4”	7.7”	36.6”	9.4"x15.7"	7.9	7.6”	III
AMR-66-1060-PS-III	6,600	30.0”	10"-60"	40.2”	1,730	12.8”	13.4”	7.7”	36.6”	9.4"x15.7"	7.9	7.6”	III
AMR-66-1063-PS-III	6,100	31.5”	10"-63"	40.2”	1,750	13.2”	13.4”	7.7”	36.6”	9.4"x15.7"	7.9	7.6”	III

Notes:

- Two hydraulic functions.
- See hydraulic pressure and flow rate recommendations.
- Standard contact pads: cast pad with high-friction surface.
- For 0-degree tilt special arms are available. Consult Bolzoni Auramo.

Options:

- Special roll ranges,
- Contact pad options:
  - steel-sprayed
  - rubber faced
  - polyurethane faced
  - other contact pad friction surfaces
  - full length contact pads.

CERTIFIED ISO 9001 MANUFACTURER

79BA0004CAN - 0222

BOLZONI AURAMO CANADA Ltd
211 AVENUE LABROSSE, POINT-CLAIRE - QUEBEC H9R 1A3 (CANADA)
TEL. +1-800 685 78 71 *(Canada only)* - TEL. +1-514 685 78 71

BOLZONI GROUP