USE AND MAINTENANCE MANUAL

ORIGINAL INSTRUCTIONS

BALE CLAMP - FORK CLAMP - HAND ROTATING FORK CLAMP - FOR FOAM BLOCKS

INTRODUCTION

This manual contains instructions for assembly, periodic and extraordinary maintenance and troubleshooting.
The instructions in this manual supplement, and do not replace, the obligation to obey occupational safety and accident-prevention laws, which is the user company's responsibility.
The user company is, likewise, required to follow all the instructions in this manual, including training its personnel to use and maintain the attachment.

SPECIFICATIONS AND USE OF THE ATTACHMENT

Attachment, to be hooked to a forklift truck, for handling bales of cellulose, cotton, tobacco, yarns or pulp paper. It consists of a jaw guide frame complete with hooks with ISO 2328 profile for fastening to the truck, with or without semi-incorporated side shifting and with or without 360° rotation; a hydraulic power plant adequate for the needs of the specific handling, regeneration valves to increase the opening speed, shifting of the load obtained with valves, synchronism of the jaws , regulation of the tightening pressure of the load; jaws or forks (welded, bolted or rotating forks), driven by opposing linear actuators, of shape and dimensions suitable for the load to be handled.

SYMBOLS USED

⚠ Situation with possible risks for the operator's safety.

Procedure that must be performed.

Notes to read carefully.

INDEX

PART 1: FIXING TO THE TRUCK AND ADJUSTMENTS

USE AND MAINTENANCE MANUAL

PART 2: MAINTENANCE

1. RECOMMENDATIONS FOR USING THE EQUIPMENT

1.1. PROHIBITED MOVEMENTS

Transporting an unstable or uncentred load; too bulky, reducing visibility; of weight greater than the indicated capacity; moving an already deposited load using the load to be deposited; using the attachment when it presents structural deformations or operating anomalies.

Transporting persons or performing manoeuvres with persons in the radius of action of the truck.

Parking the truck with motor running and/or load lifted on a rough surface or on climbing ramps.

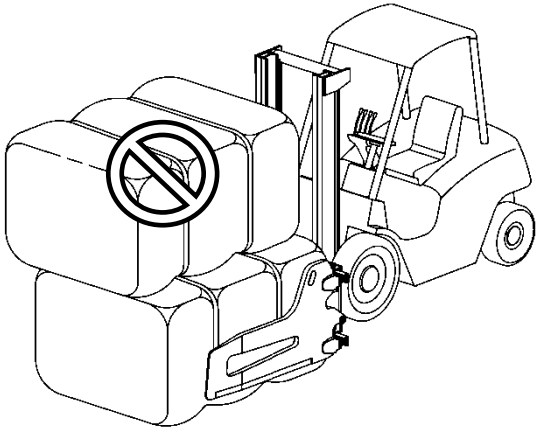

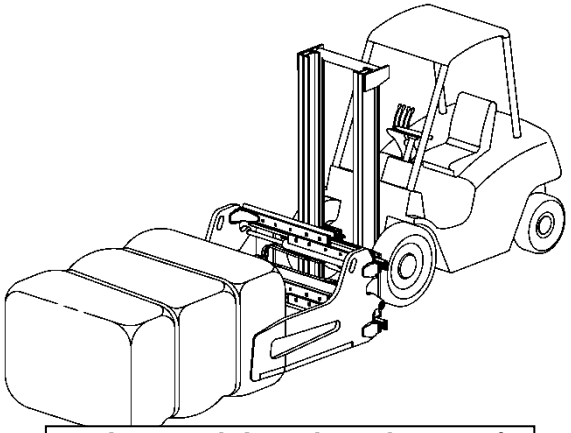

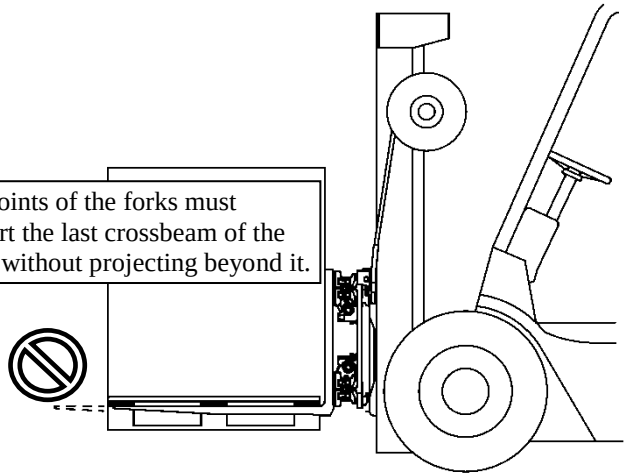

The points of the forks must support the last crossbeam of the pallet without projecting beyond it.

Executing movements or manoeuvres with load raised to a high level.

Proceeding at high speed on a rough surface or climbing ramps.

Avoid gripping bales with just the point of the jaws. If this manoeuvre is necessary, do not tighten at full power.

Handling loads whose height can interfere with visibility during the manoeuvre.

1.2. CORRECT MOVEMENTS

Be careful when gripping the load to avoid damage or dangerous movements of the adjacent bales.

The load must be stable, with crossed layers or tied with straps.

When moving with the truck, keep the mast tilted (the point of the forks high), the load lifted slightly from the ground and centred, adjusting the speed based on the road surface and any obstacles or presence of persons on the route.

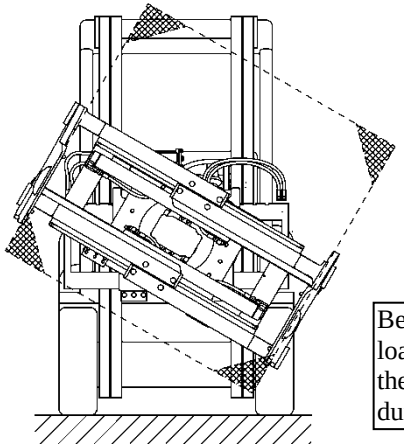

Be especially careful that the load or attachment does not hit the floor or side obstructions during rotation.

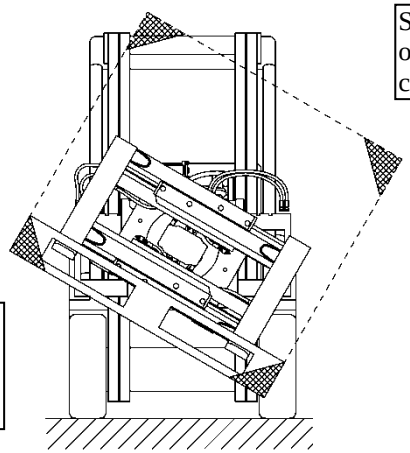

Slide the pallet or container on from the side with the slot closed on four sides.

The outside distance of the forks must be 40-80 mm less than the inside distance of the pallet.

2. CHECKS OF THE TRUCK

The recommended diameter for any additional power plant is 9.5 mm.

Distributor with no. 4 levers for controlling movement .

When checked at the distributor, the truck's hydraulic pump must have a maximum pressure of 23 MPa and a flow-capacity of 20-25 l/m’.

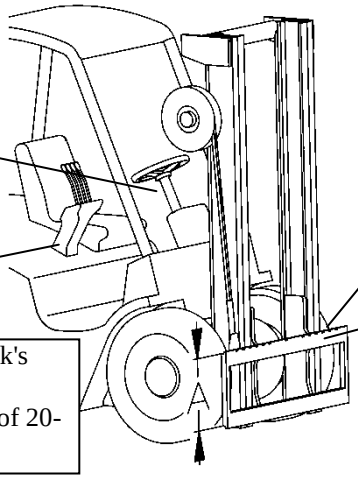

The fork placement notches must be in good condition and not clogged.

The fork-holder plate must be flat and without front projections.

ISO 2228 Dimension “A” (mm):
Class I = min. 304 – max. 305
Class II = min. 380 - max. 381
Class III = min. 474.5 – max. 476
Class IV = min. 595.5 – max. 597

DO NOT USE THE ATTACHMENT FOR ANY PURPOSE OR MOVEMENT OTHER THAN INDICATED.

THE EFFECTIVE CAPACITY OF THE COMBINATION OF THE TRUCK AND THE ATTACHMENT IS THE RESPONSIBILITY OF THE MANUFACTURER OF THE TRUCK AND MAY NOT CORRESPOND TO WHAT IS SPECIFIED ON THE IDENTIFICATION PLATE. CONTACT THE MANUFACTURER OF THE TRUCK FOR ITS DEFINITIVE CAPACITY.

3. ATTACHMENT CONFIGURATION

3.1. FOR SHIPPING

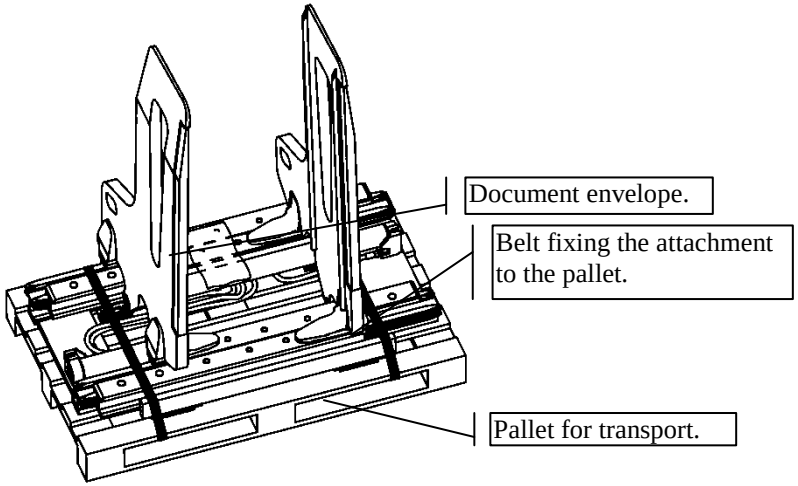

The attachment is protected by a heat-shrink covering.

3.2. WITH FORK JAWS

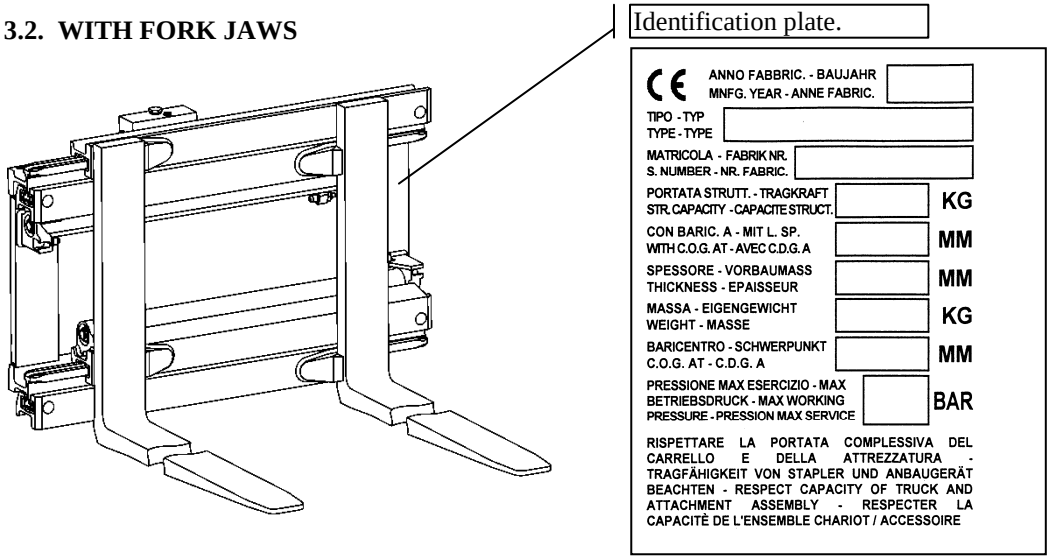

3.3. WITH JAWS FOR BALES / FOAM BLOCKS

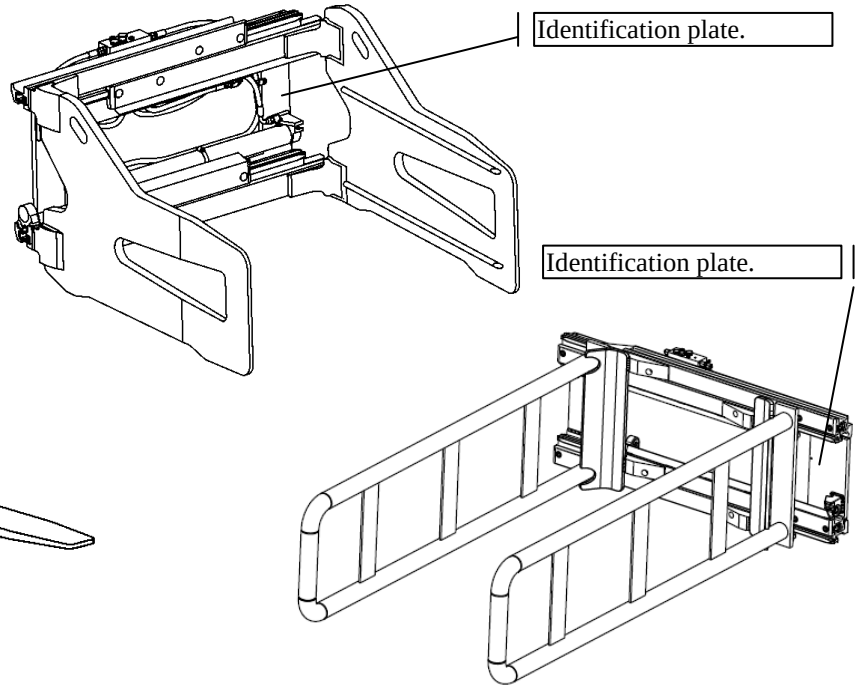

3.4. WITH ROTATION

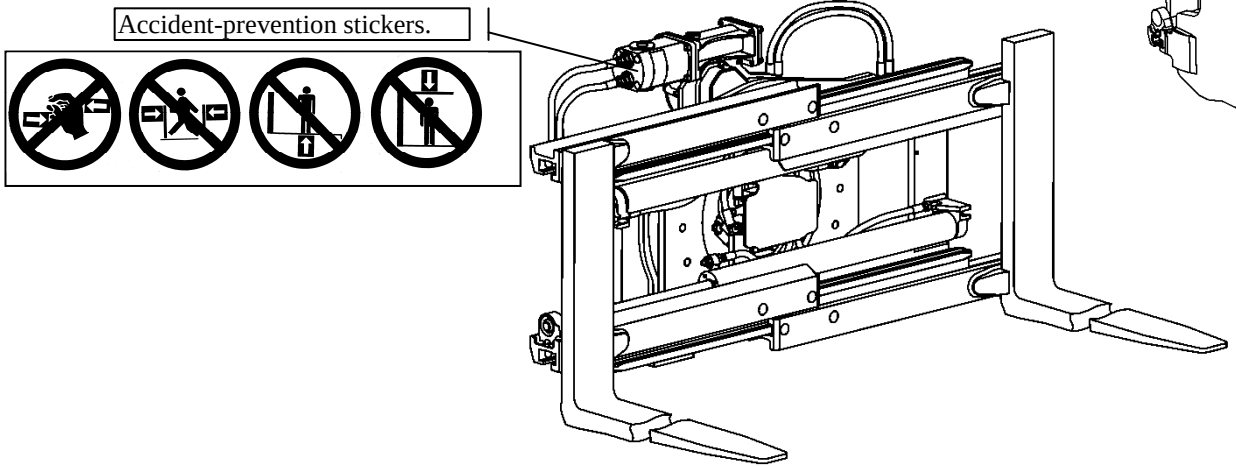

4. ATTACHMENT DESCRIPTION

4.1. WITH INCORPORATED SHIFTING

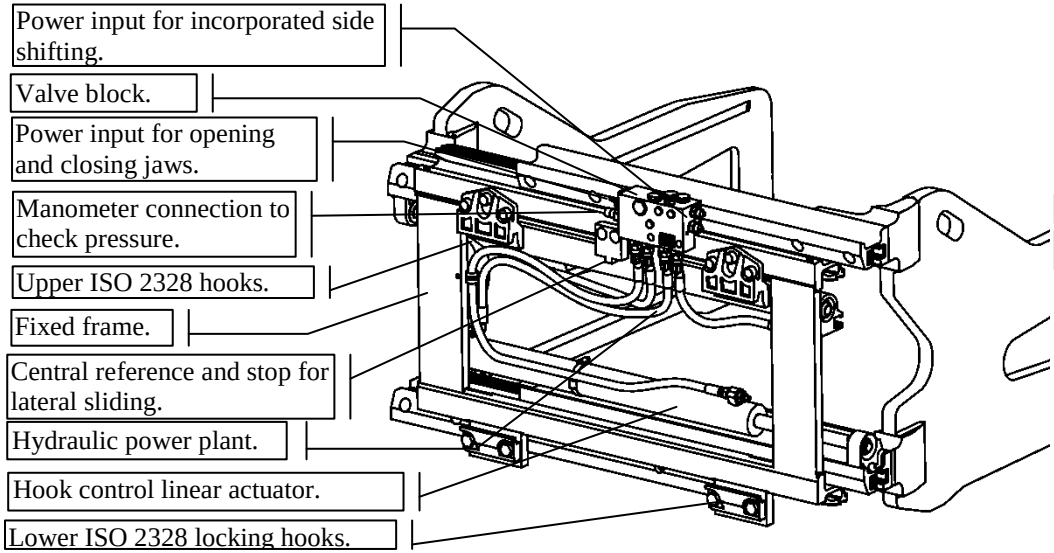

4.2. WITH SEMI-INCORPORATED SHIFTING

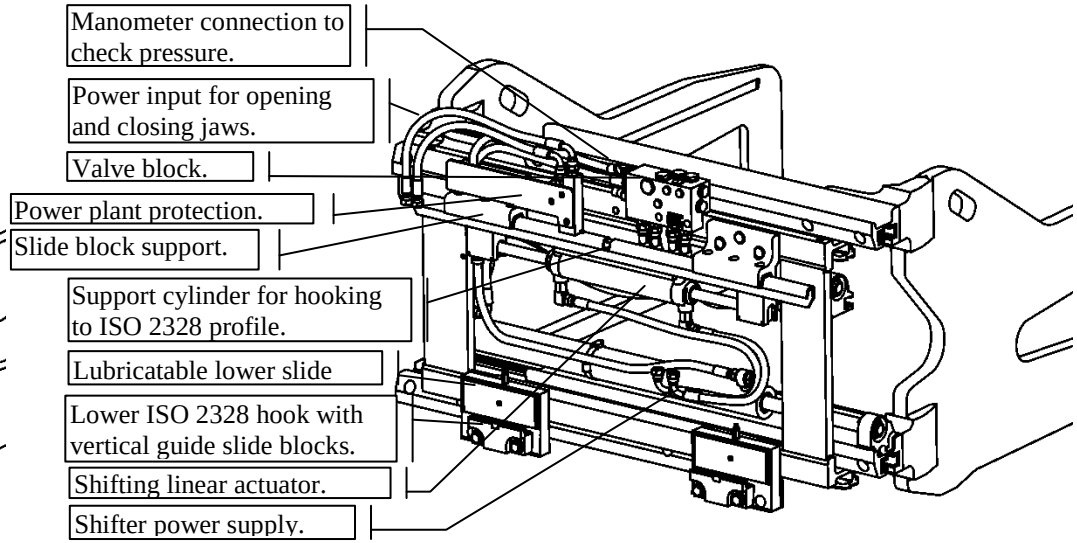

4.3. WITH ROTATION 360°

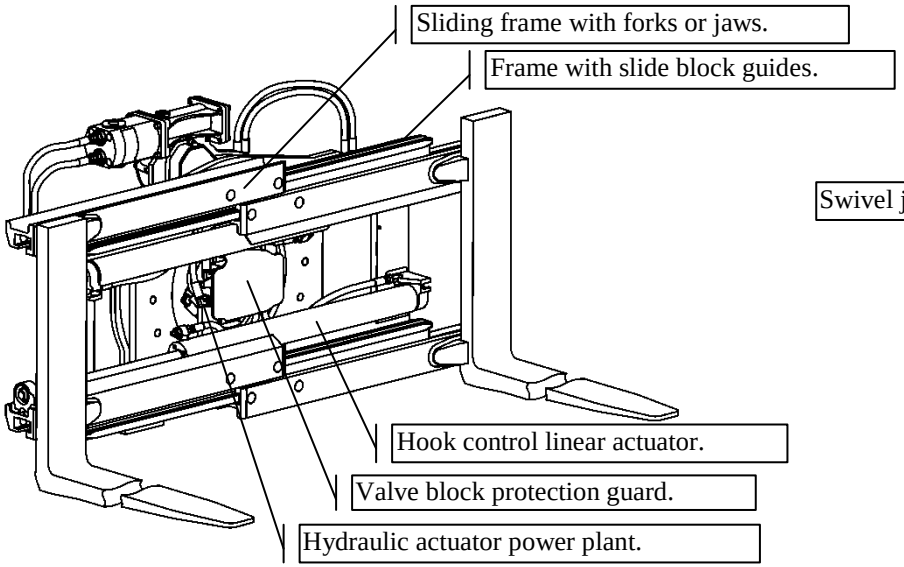

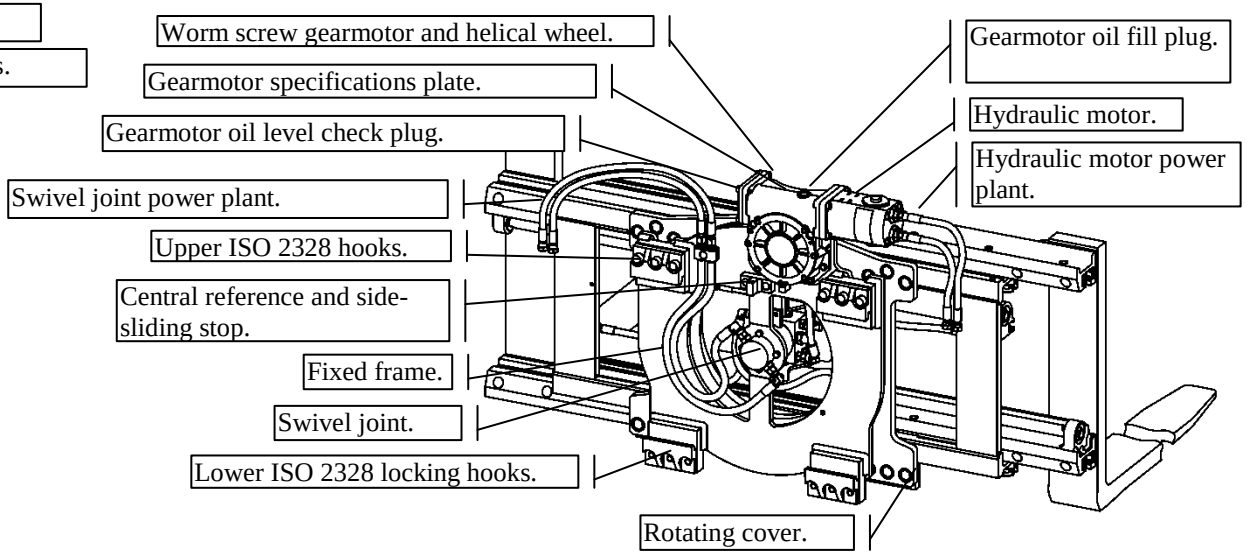

5. FIXING TO THE TRUCK

5.1. PREPARATION

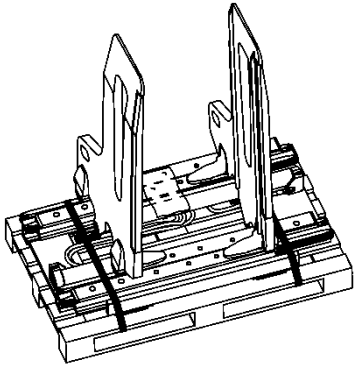

1) Remove the Nylon protection and the pallet fastening belts.

2) Fasten no. 2 eyebolts to the ends of the frame.

3) Disconnect the lower jaws. ISO 3318 wrench.

4) Use cables with UNI ISO 4479 hooks and straps to lift the attachment.

5) Hook the attachment to the truck so that the central stop engages the central notch of the fork-holder plate.

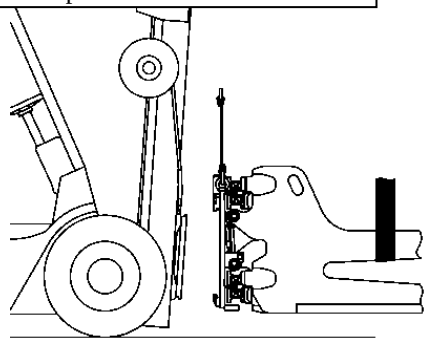

5.2. FASTENING LOWER HOOKS

Use an ISO 3318 wrench to fasten the lower jaws.

Wrench size and screw tightening.		
FEM class.	Wrench mm	Tightening N/m
2	22	120
3	24	200
4	27	280

5.3. HOOKING BASIC CLAMPS AND CLAMPS WITH ROTATION

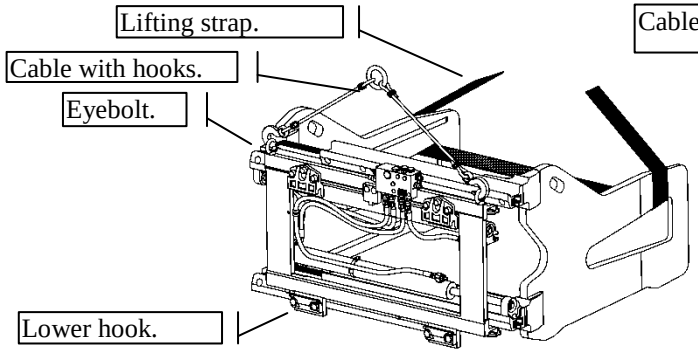

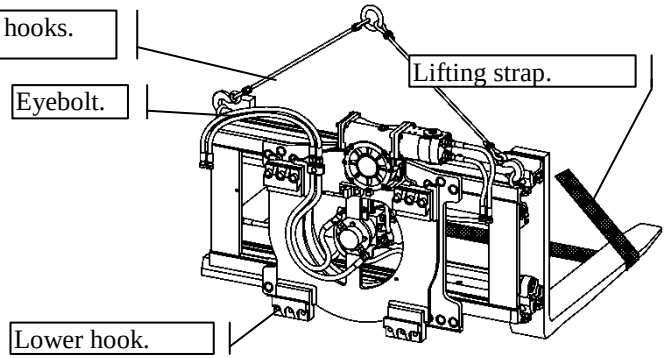

5.3.1. HOOK ADJUSTMENT

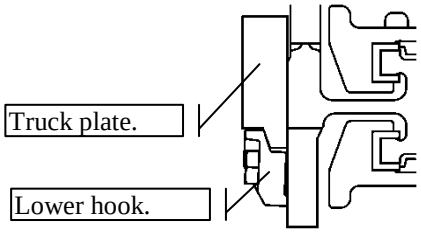

The lower hooks must lock the attachment to the fork-holder plate.

5.4. HOOKING CLAMP WITH SEMI-INCORPORATED SHIFTING

To disassemble the lower hooks, loosen the screws, avoiding the detachment of the fastening brackets, and moving downwards.

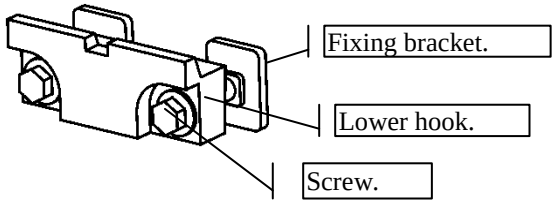

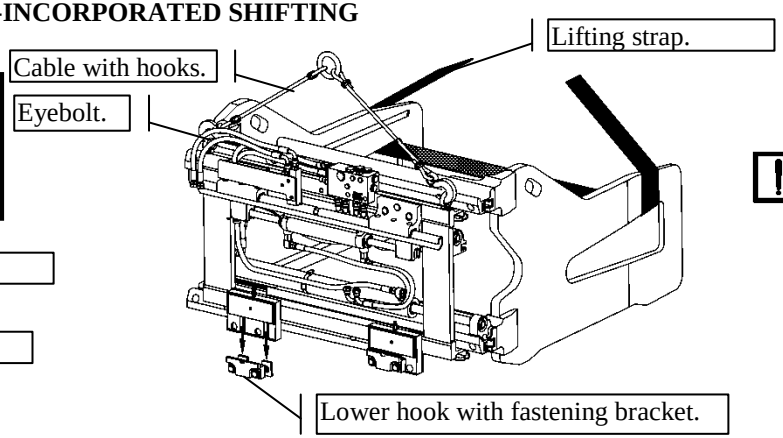

5.4.1. HOOK ADJUSTMENT

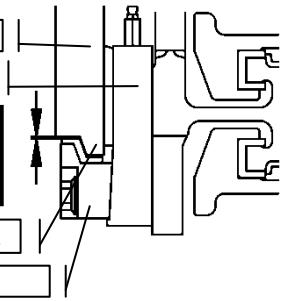

Check that the slide blocks and fastening bracket are positioned perfectly.

When positioning the lower hook, maintain a distance of 1-2 mm.

5.5. CONNECTING HOSES

YOU MUST APPLY A PROTECTION OR DEVICE TO THE JAW-OPEN CONTROL LEVEL TO AVOID ACCIDENTALLY PUSHING IT AND LOSING THE LOAD. THE MANUFACTURER OF THE TRUCK, OR THE INSTALLER, IS RESPONSIBLE FOR APPLYING THIS DEVICE.

Before connecting the hoses, eliminate the pressure in the truck's circuit following the manufacturer's instructions.

Oil can spill out of the hoses. Prepare a container to collect the fluid.

The connection hoses between valve and truck power plant are options.

5.5.1. FOR CLAMP WITH CAPACITY UP TO 2.5 TONS

5.5.1.1. WITHOUT SHIFTING

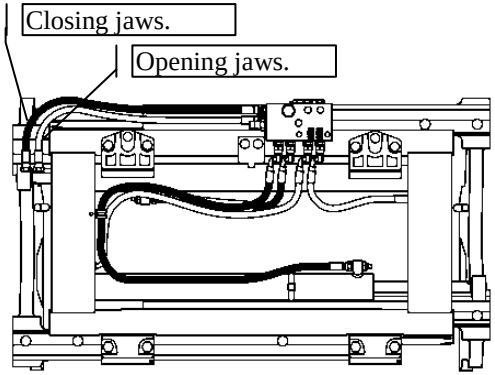

5.5.1.2. INCORPORATED SHIFTING

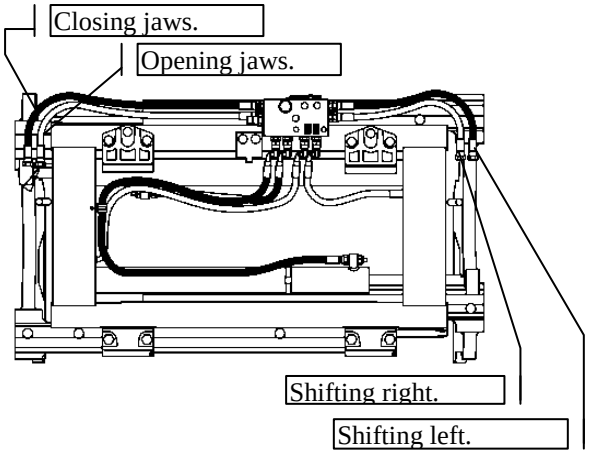

5.5.1.3. SEMI-INCORPORATED SHIFTING

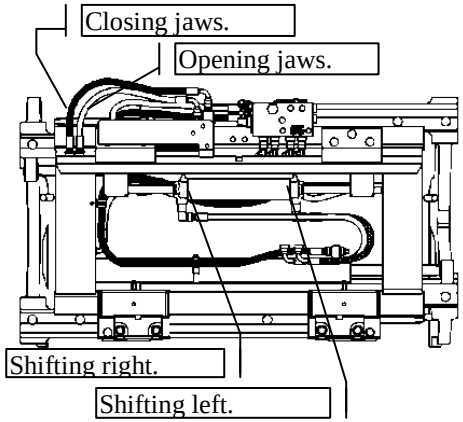

5.5.2. FOR CLAMP WITH CAPACITY FROM 2.6 TONS TO 4.0 TONS

5.5.2.1. WITHOUT SHIFTING

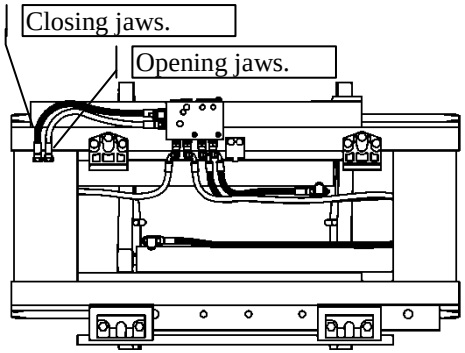

5.5.2.2. INCORPORATED SHIFTING

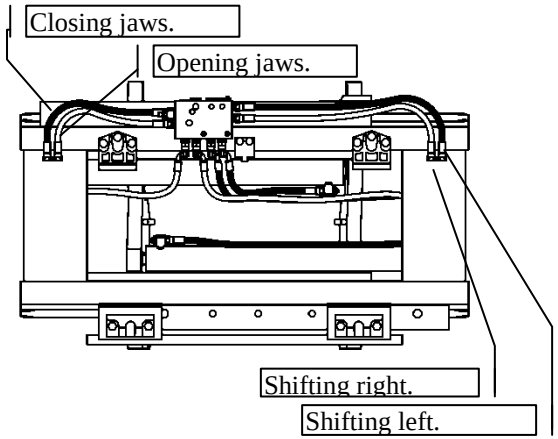

5.5.2.3. SEMI-INCORPORATED SHIFTING

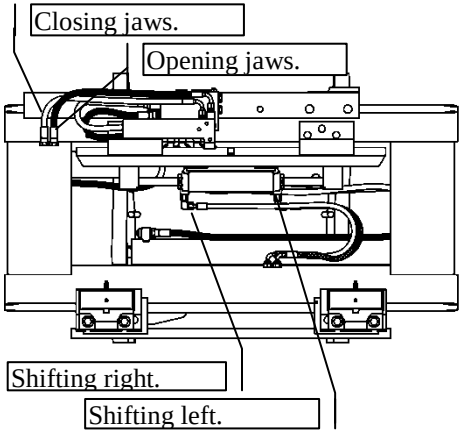

5.5.3. FOR CLAMPS WITH ROTATION AND CAPACITY UP TO 4.0 TONS

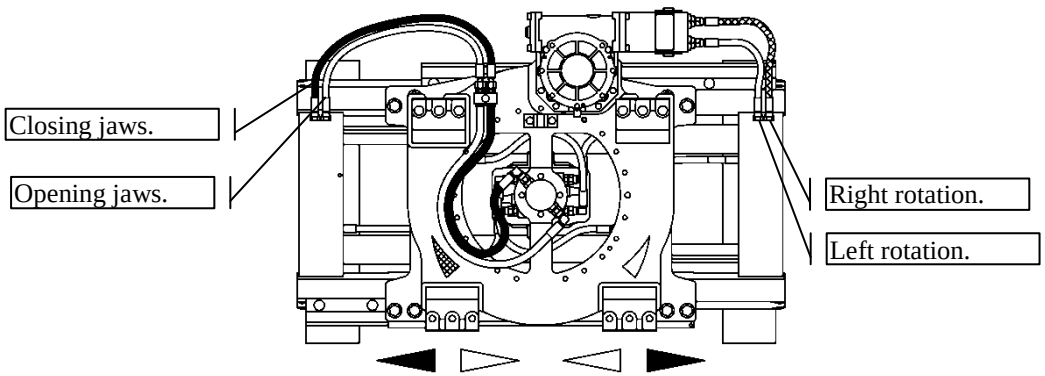

5.5.4.1. TIGHTENING FITTINGS

1) Clamp the fixed fitting with a 17-mm ISO 3318 wrench.

2) Tighten the fastening nut with a 19-mm ISO 3318 wrench.

3) Check the fastening of the bracket with a 5-mm ISO 2936 wrench.

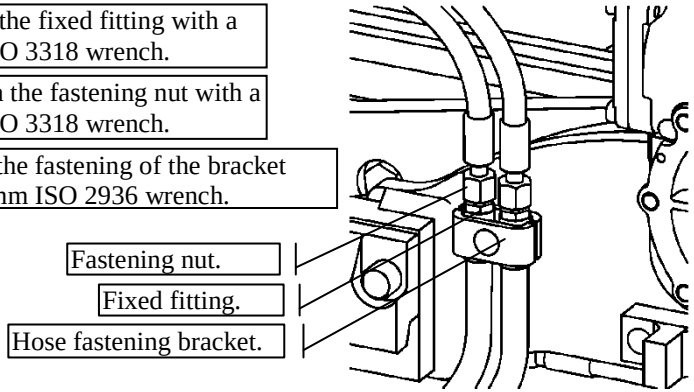

6. HYDRAULIC POWER PLANT CONNECTION AND DIAGRAM

YOU MUST APPLY A PROTECTION OR DEVICE TO THE JAW-OPEN CONTROL LEVEL TO AVOID ACCIDENTALLY PUSHING IT AND LOSING THE LOAD. THE MANUFACTURER OF THE TRUCK, OR THE INSTALLER, IS RESPONSIBLE FOR APPLYING THIS DEVICE.

Before connecting the hoses, eliminate the pressure in the truck's circuit following the manufacturer's instructions.

Oil can spill out of the hoses. Prepare a container to collect the fluid.

6.1. MOVEMENT CHECK

To check the connections, perform 5 complete movements without and with a load.

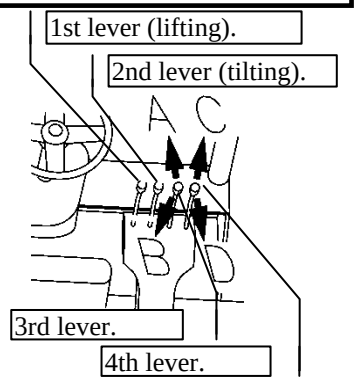

6.2. CLAMP CAPACITY UP TO 2.2 TONS

6.2. 1. WITHOUT SHIFTING

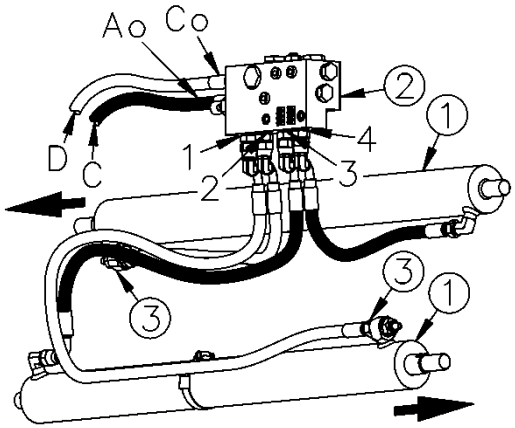

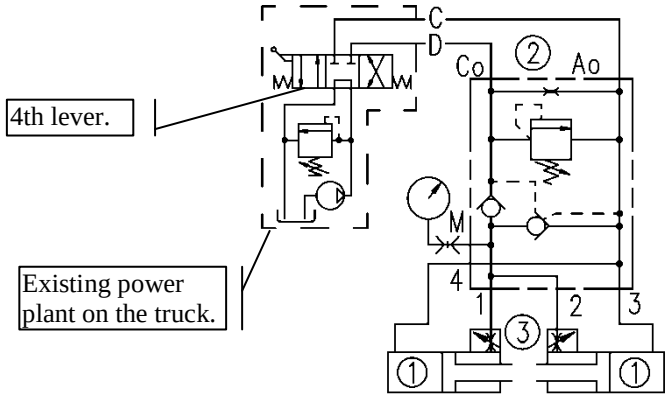

6.2.2. WITH SHIFTING INCORPORATED

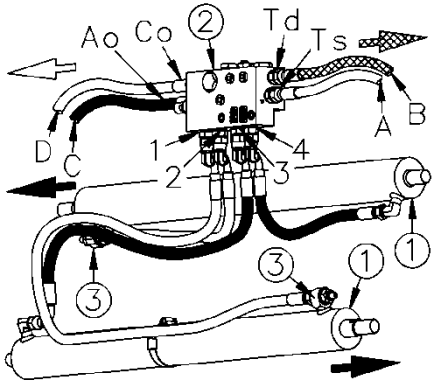

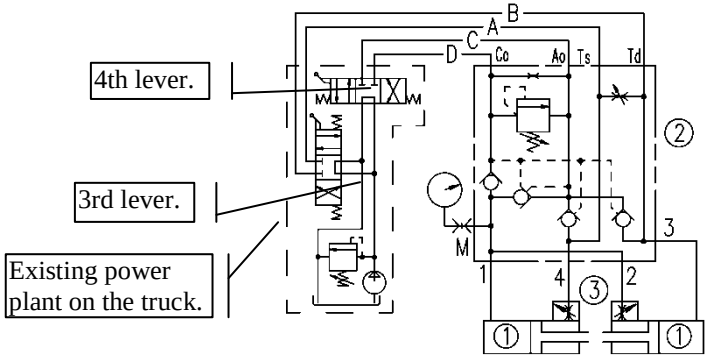

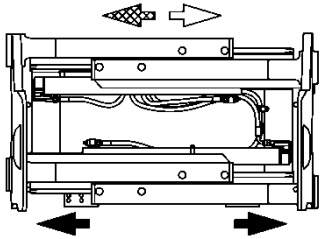

6.2.3. WITH SEMI-INCORPORATED SHIFTING

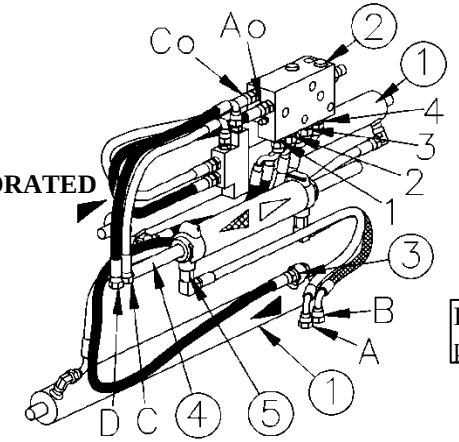

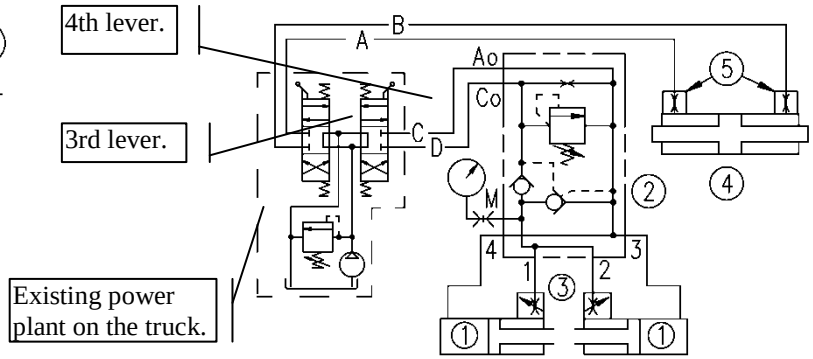

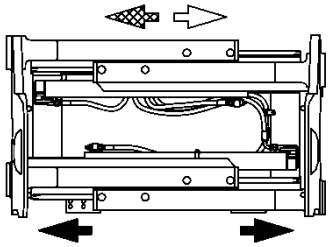

6.2.4.. WITH ROTATION 360°

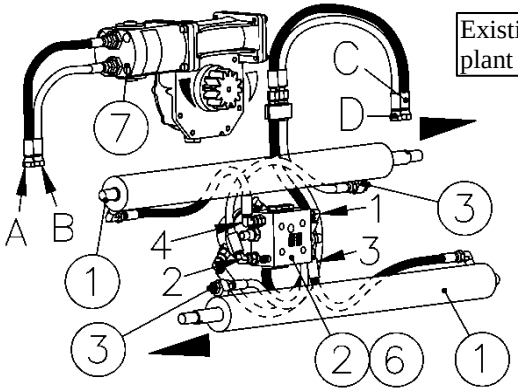

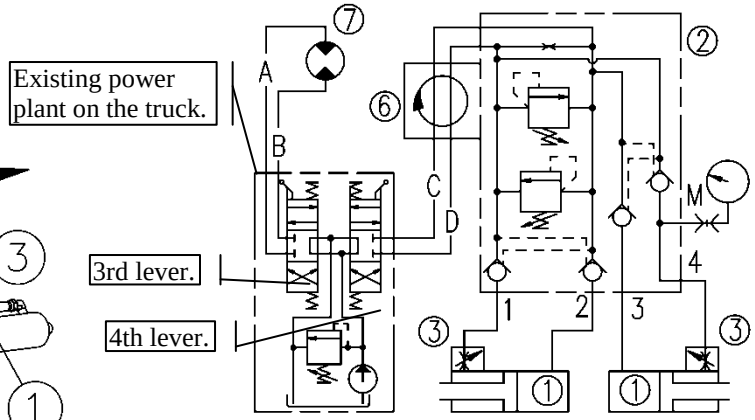

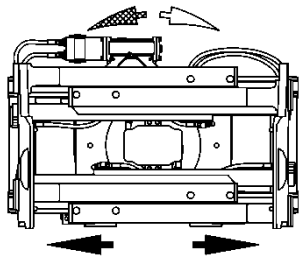

6.3. CLAMP WITH CAPACITY GREATER THAN 2.2 TONS

6.3.1. WITHOUT SHIFTING

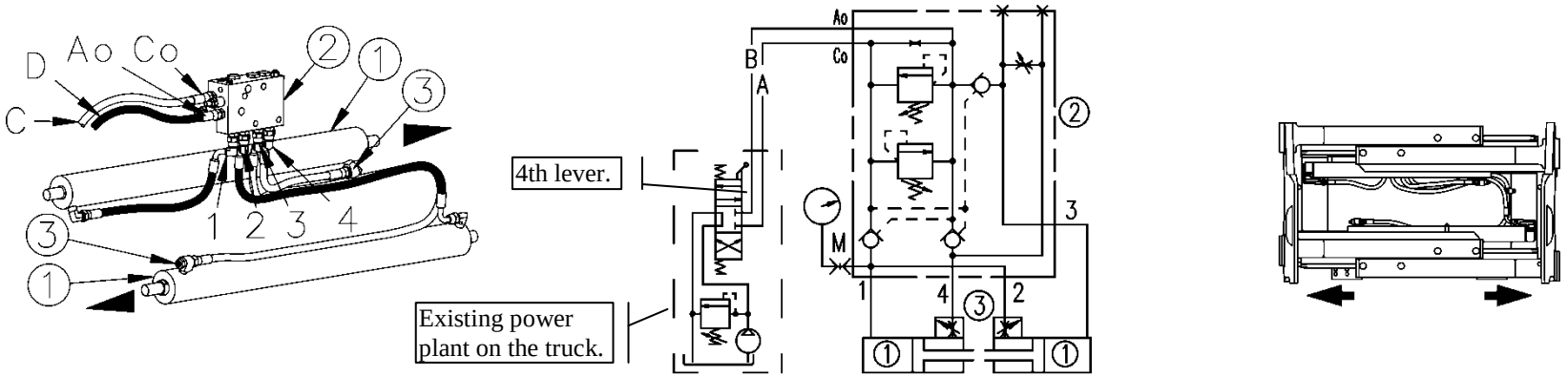

6.3. 2. WITH SHIFTING INCORPORATED

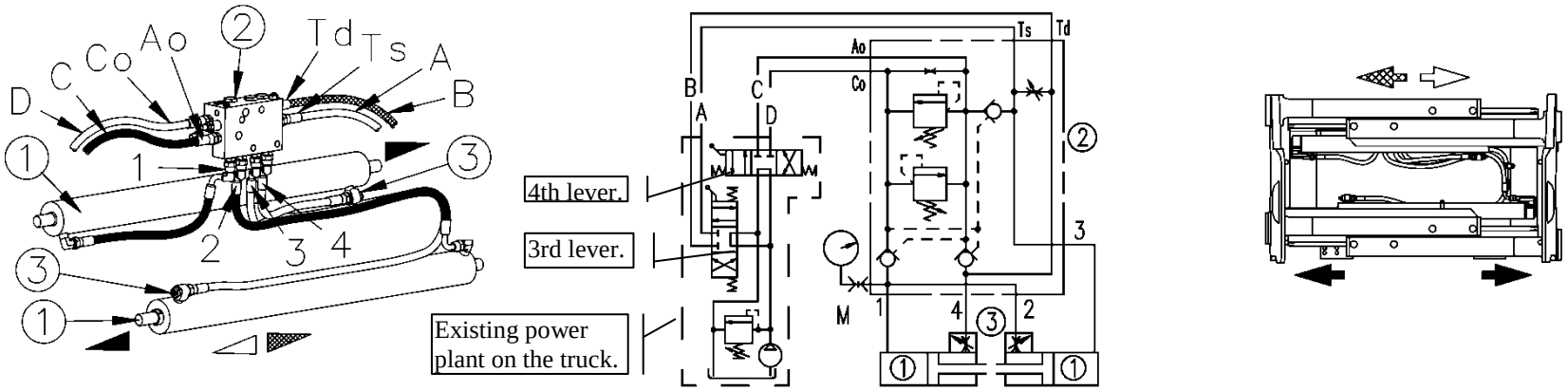

6.3.3 WITH SEMI-INCORPORATED SHIFTING

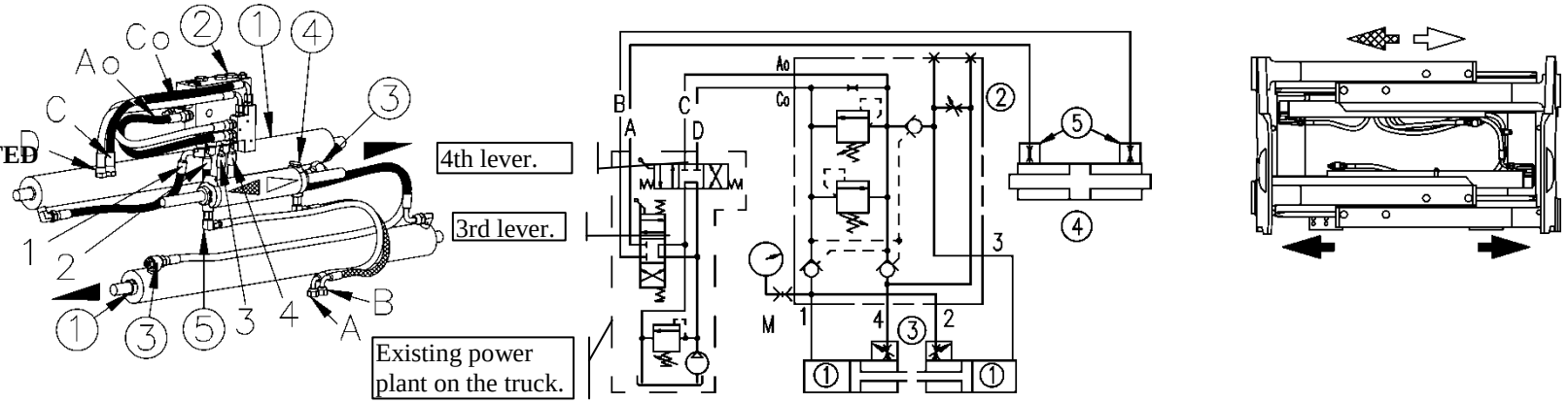

6.3.4. WITH ROTATION 360°

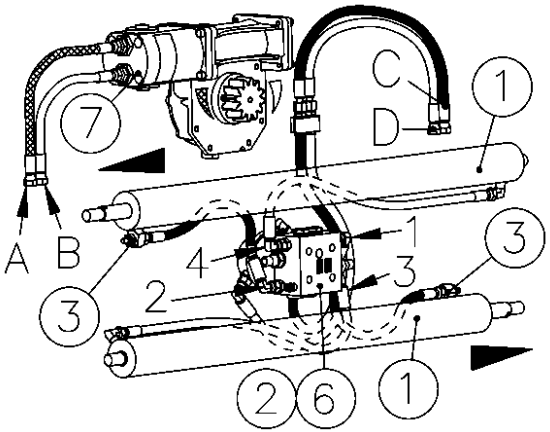

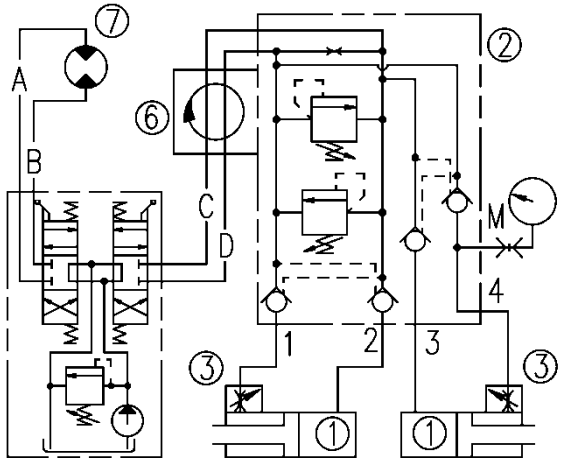

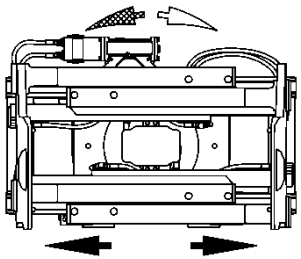

7. CHECKS AND ADJUSTMENTS

The valves are preset and checked during final acceptance testing with in-house controllers. Perform the indicated checks/adjustments if there are anomalies, loss of load or lack of synchronism of the jaws.

Contact the post-sales support office before adjusting the tightening pressure.

Before connecting the hoses, eliminate the pressure in the truck's circuit following the manufacturer's instructions.

With the application of the manometer, you only check/record the pressure in the hydraulic circuit for the gripping of the load.

7.1. MANOMETER KIT

SUPPLIES UPON REQUEST.

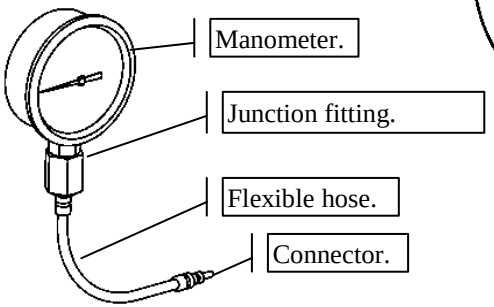

7.2. MANOMETER CONNECTION

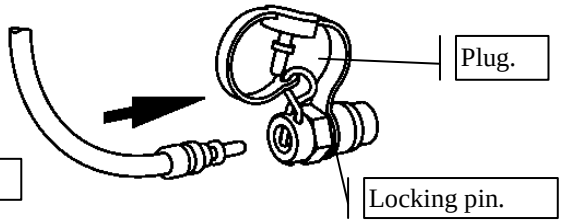

Remove the locking pin and take off the plug. Insert the connector and press all the way down to lock the pin.

7.3. NON-ROTATING ATTACHMENT

7.3.1. CLAMPING PRESSURE

Take the manometer reading with the attachment at its minimum opening.

The maximum pressure, which must not be exceeded, is indicated on the valve bodies.

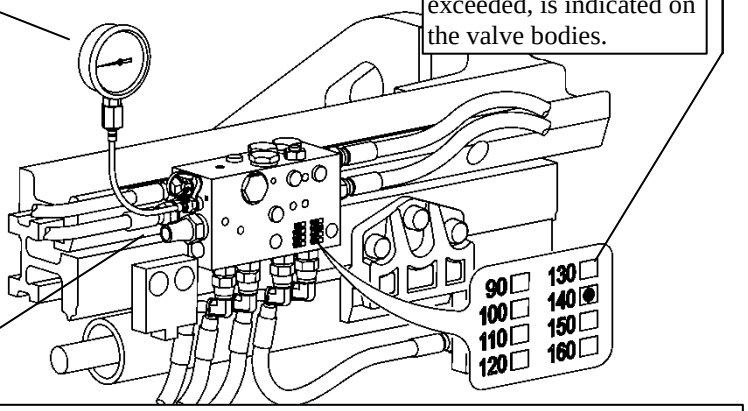

Remove the protection with a 24-mm ISO 3318 wrench; loosen the lock nut with a 17-mm ISO 3318 wrench; make the adjustment with a 5-mm ISO 3926 wrench, tightening to increase the pressure; tighten the lock nut.

The protection of the regulator valve is an anti-tampering safety feature. The manufacturer will not be liable for damage or breakage if not contacted before any adjustments.

7.3.2. SPEED AND SYNCHRONISM

To restore the synchronism, adjust the cylinder of the slow jaw to avoid a reduction of the total closing speed. A speed difference of 10% of the travel is allowed between the jaws.

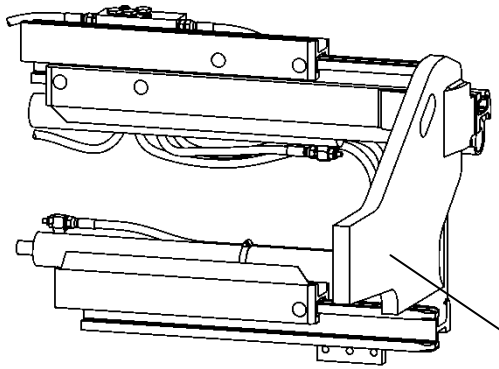

Loosen the lock nut with a 13-mm ISO 3318 wrench, open the screw by 90° with a 4-mm ISO 3926 wrench and check the results; repeat the adjustment until the desired result is obtained. At the end of adjustment, tighten the lock nut.

The opening speed of the jaws can be increased by adjusting the regeneration circuit. We recommend caution in making adjustments to avoid losing the load at the end of shifting.

Loosen the lock nut with a 17-mm ISO 3318 wrench and turn the screw 90° with a 4-mm ISO 3926 wrench to increase the speed; check the result and repeat the adjustment until you obtain the desired result. At the end of adjustment, tighten the lock nut.

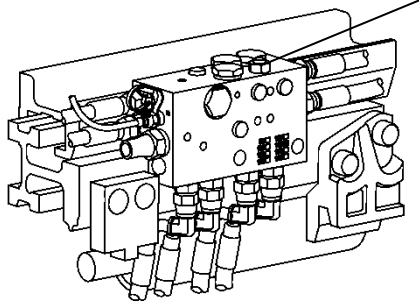

7.4. ROTATING ATTACHMENT

7.4.1. CLAMPING PRESSURE

Remove the protection with a 24-mm ISO 3318 wrench; loosen the lock nut with a 17-mm ISO 3318 wrench; make the adjustment with a 5-mm ISO 3926 wrench, tightening to increase the pressure; tighten the lock nut.

Take the manometer reading with the attachment at its minimum opening.

The protection of the regulator valve is an anti-tampering safety feature. The manufacturer will not be liable for damage or breakage if not contacted before any adjustments.

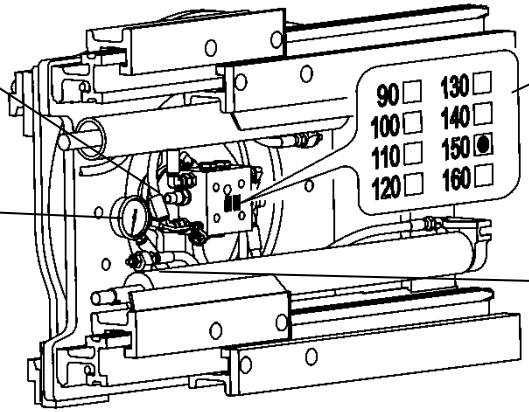

7.4.2. SPEED AND SYNCHRONISM

The maximum pressure, which must not be exceeded, is indicated on the valve bodies.

Loosen the lock nut with a 13-mm ISO 3318 wrench, open the screw by 90° with a 4-mm ISO 3926 wrench and check the results; repeat the adjustment until the desired result is obtained.

To change the speed or synchronism of the jaws, adjust the regulator in the rod-side cylinder cap, as indicated above.

8. DAILY CHECKS

8.1. FOR ALL CLAMPS

At the start of every work shift, check the points to the side and inform maintenance personnel of any problems.

Check the tightness of the nuts fastening the rod and bottom of the fork movement cylinders.

The attachment's centre tooth must engage the centre notch of the truck's fork-holder plate.

Check for any leaks from the jaw movement cylinders.

Check that the lower jaws are correctly positioned and fastened.

Check the cleanliness and lubrication of the guides or slide block tracks.

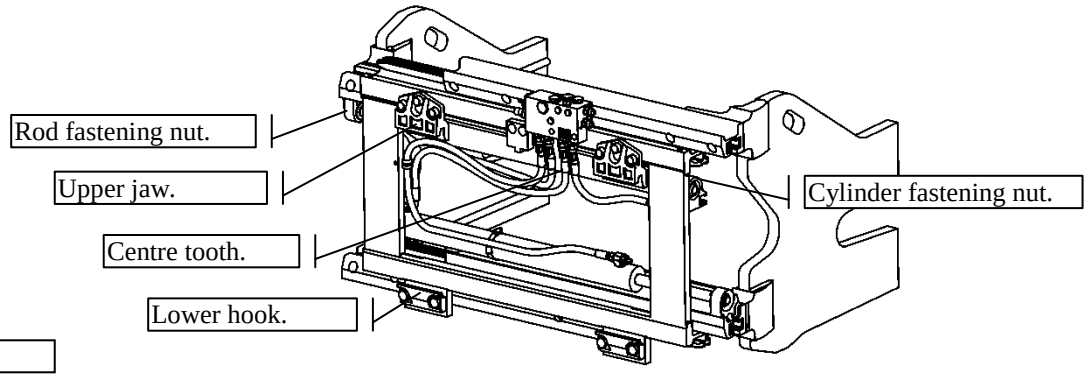

8.2. ADDITION FOR ROTATING CLAMPS

Check for oil leaks from the gearmotor or swivel joint and grease leaks from the fixed frame coupling and rotating cover.

Check the oil lever in the gearmotor.

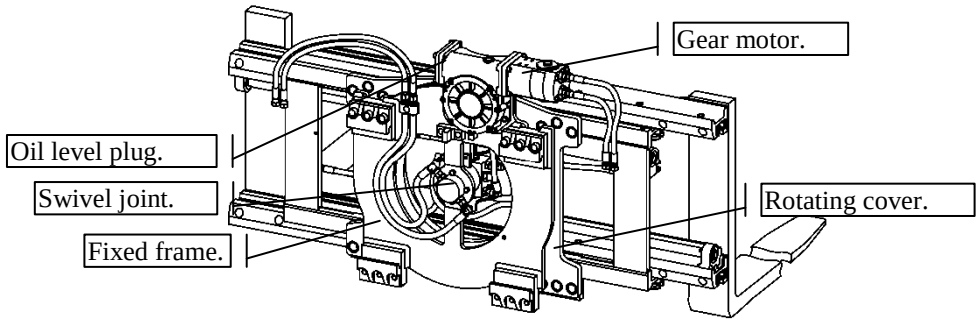

8.3. ADDITION FOR CLAMPS WITH SEMI-INCORPORATED SHIFTING

The centre tooth of the upper slide block guide must engage the centre notch of the truck's fork-holder plate.

Check the integrity of the rear hose protection and the hoses.

Check for any leaks from the shifting cylinder.

Check the correct positioning and fastening of the horizontal and vertical slide blocks and lower hooks.

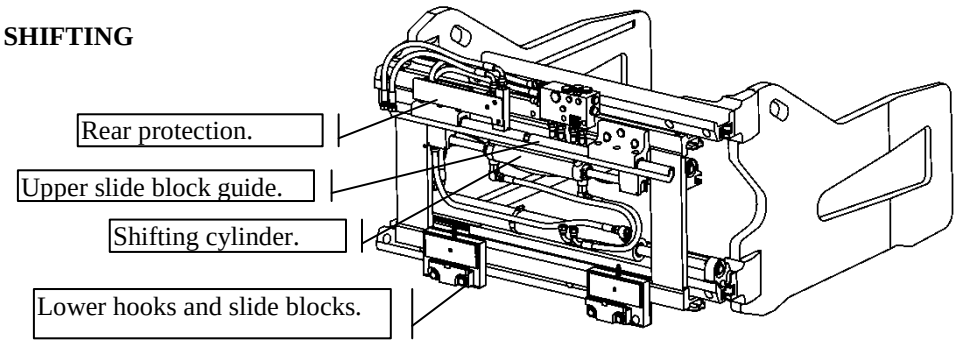

9. REGULAR MAINTENANCE

PERIODIC MAINTENANCE DIAGRAM	
OPERATIONS	**Hours of work**
For basic clamp	
Clean and grease jaw-sliding “a” guides.	200
Check screw tightness and oil leaks from the hydraulic connections.	
Check that the nameplates and accident-prevention stickers in “c” are easy to read.	
In addition to the operations for every 200 working hours, do the following:	
Check slide blocks “b” and replace if necessary.	1000
Check the tightening pressure and synchronism of the jaws.	
Check the condition of the flexible hoses and fittings.	
Check hydraulic actuators “d”; check for oil leaking from the plug and the condition of the chromed surface of the rod.	
Check the wear on the clamping surface of the jaws.	
In addition to the operations for every 200 and 1000 working hours, do the following:	
In zone “f”, check for wear on the parts sliding on the ground.	2000
Check the integrity of jaw-fastening base “e”.	
Look for deformations or breakage in the structure or welds.	
For a clamp with rotation, in addition to the operations for the basic clamp, do the following:	
Lubricate points “g”. Repeat the operation every 90° of rotation.	100
Check gearmotor oil level “h”. To top-off, use plug “i”.	
In addition to the operations for every 100 working hours, do the following:	
Check the tightness of screws “l” fixing the rotating cover.	500
Check for oil leaks at points “m” and replace the gasket seals, if necessary.	
For a clamp with semi-incorporated shifting, in addition to the operations for the basic clamp, do the following:	
Clean and grease guides “a”. Grease points “p”.	200
Check and, if necessary, replace shifting slide blocks “o”.	
In addition to the operations for every 200 working hours, do the following:	
Check the condition of the flexible hoses and fittings” in “q”.	1000
Check hydraulic actuators “d”; check for oil leaking from the plug and the condition of the chromed surface of the rod.	
Clamp with hand rotating forks, in addition to the operations for standard clamps, carry out:	
Control and greasing the flange of the rotating forks in "s", through special grease nipples.	200

Before connecting-disconnecting the hoses, eliminate the pressure in the truck circuit following the manufacturer's instructions.

IF THE EQUIPMENT IS USED IN DUSTY, HUMID OR CORROSIVE ENVIRONMENTS, WE RECOMMEND HALVING THE HOURS OF WORK.

RECOMMENDED LUBRICANTS: For insides: ISO X M2 (SHELL ALVANIA GREASE R2). Outsides: ISO CB 32 (ESSO NUTO32).

Position “a” UNI 7763-AM6-5.8 ball head greasers

BASIC CLAMP

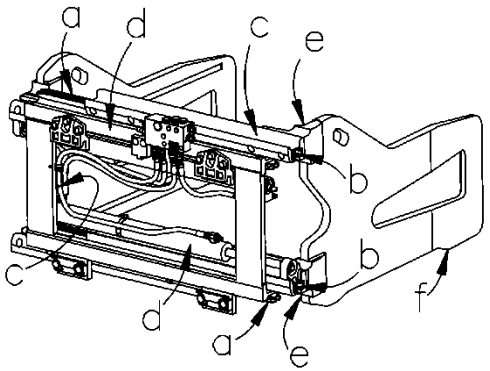

Check the wear of the forks per the ISO 5057 standard.

CLAMP WITH ROTATION

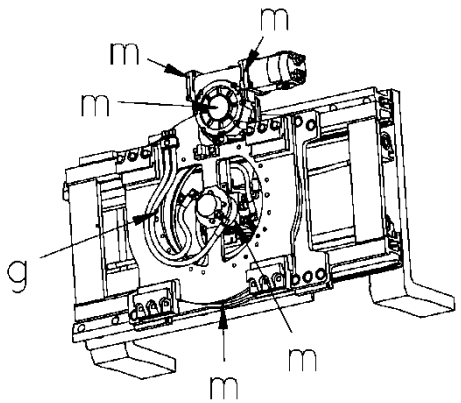

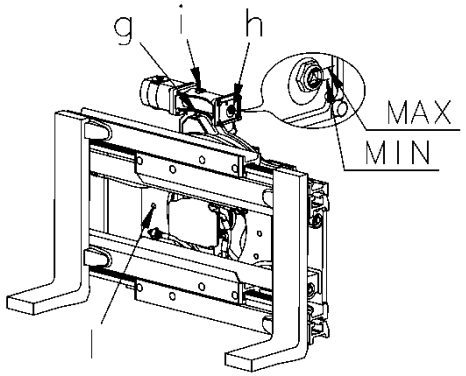

CLAMP WITH SEMI-INCORPORATED SHIFTING

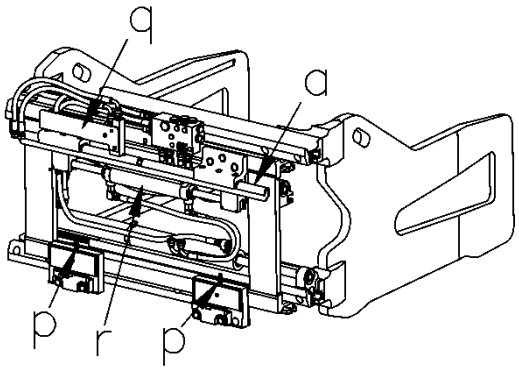

CLAMP WITH MANUALLY ROTATING FORKS

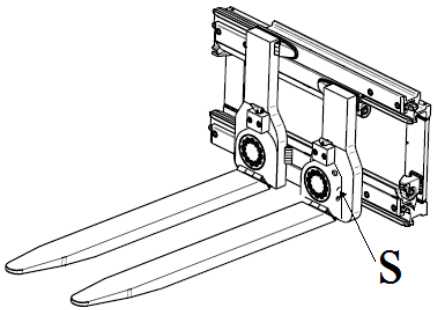

10. Extraordinary Maintenance

10.1. JAW OR FORK DISASSEMBLY

Attachment fixed to the truck or positioned so that you can move the jaws hydraulically.

1) Bring the jaws to their maximum opening.

2) Disconnect the jaw from the cylinder using a 22-mm ISO 3318 wrench to clamp the rod and a 30-mm ISO 1174 socket wrench to unscrew the nut.

3) Bring the cylinders to their minimum closure, supporting the upper cylinder.

4) Slide the jaw or fork off sideways and rest it on the ground.

Use the hole in the upper part of the jaw to apply the lifting strap.

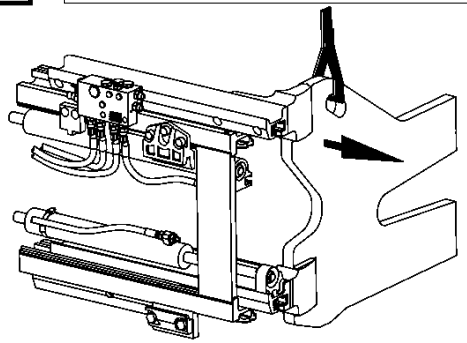

Use the lifting strap to move the forks, as shown.

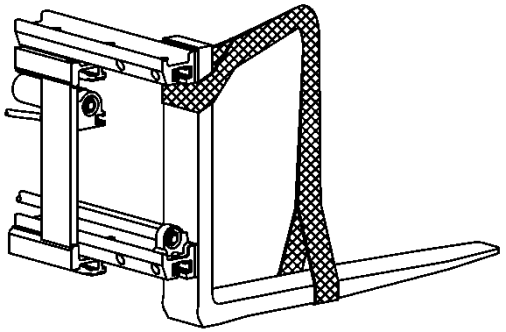

To remove the hand rotating forks

1) Remove the fork fixing flange, unscrewing the bolts with an ISO 3926 wrench

2) The fork can be removed

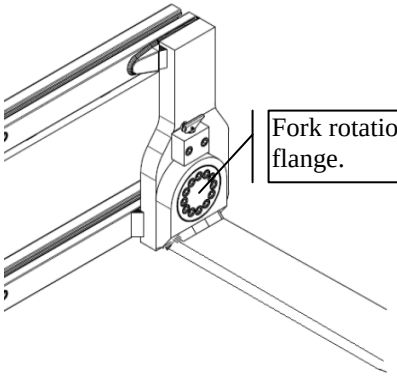

The balance of the jaw or fork becomes unstable when not guided by the frame.

TO PUT BACK THE DISASSEMBLED PARTS, PERFORM THE PROCEDURE DESCRIBED ABOVE IN REVERSE.

10.2. SLIDE BLOCK DISASSEMBLY

10.2. CLAMP WITH CAPACITY UP TO 3.2 TONS

1) Use a 4-mm ISO 3926 wrench to remove the screws and remove the slide block stop.

2) Using an 8-mm DIN 6450 punch, unlock the slide blocks and slide them off of the guide.

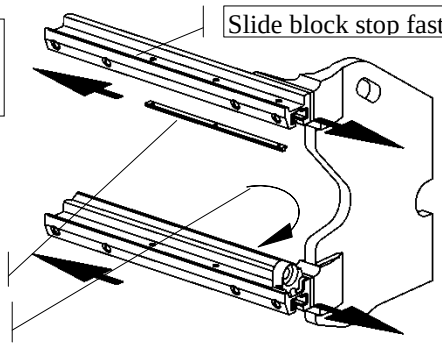

For the front slide blocks of the jaw use an ISO 2380 screwdriver because there are no release holes.

Position the stop correctly when mounting the new slide blocks.

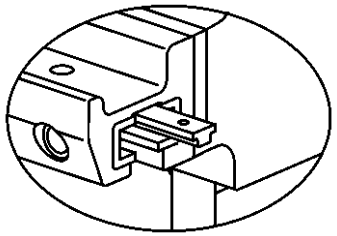

10.2. CLAMP WITH CAPACITY GREATER THAN 3.2 TONS

1) Remove the screws with a 5-mm ISO 3926 wrench.

2) Using an 8-mm DIN 6450 punch, unlock the slide blocks and slide them off of the guide.

For the front slide blocks of the jaw use an ISO 2380 screwdriver because there are no release holes.

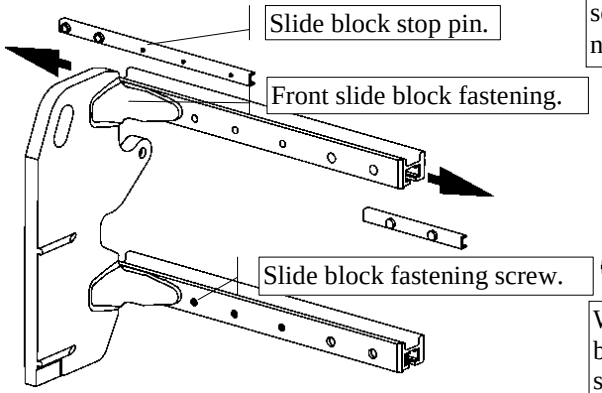

When mounting new slide blocks, make sure that the stop pin correctly engages the hole in the jaw profile.

TO PUT BACK THE DISASSEMBLED PARTS, PERFORM THE PROCEDURE DESCRIBED ABOVE IN REVERSE.

10.2.1. SLIDE BLOCK REPLACEMENT

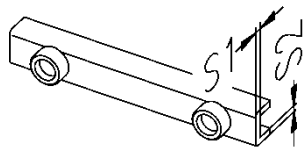

Replace the slide blocks if there is breakage or permanent deformation or if their thickness at S1 is less than 4 mm; at S2 5 mm.

10.2.2. CYLINDER ROD FASTENING

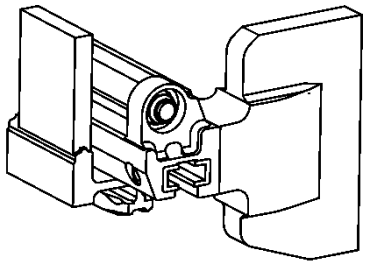

Tighten the nut until the belleville washer is locked then loosen it by 90°.

10.2.3. CYLINDER BOX FASTENING

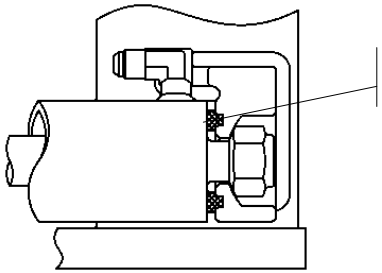

Check that the shock absorber is perfectly inserted in its seat and tighten until the cylinder is locked.

10.3. CYLINDER DISASSEMBLY

Before connecting-disconnecting the hoses, eliminate the pressure in the truck circuit following the manufacturer's instructions.

Oil can spill out of the hoses. Prepare a container to collect the fluid.

Attachment fixed to the truck or positioned so that you can move the jaws hydraulically.

1) With the clamp at its minimum opening, position the jaw at an opening of 500 mm.

2) Disconnect the cylinders from the jaws using a 22-mm ISO 3318 wrench to clamp the rod and a 30-mm ISO 1174 socket wrench to unscrew the nut.

3) Bring the cylinders to their minimum closure.

4) Disconnect the flexible hoses from the cylinders with a 19-mm ISO 3318 wrench.

5) Use a 30-mm socket wrench to unscrew the bottom-side nut and remove the cylinder.

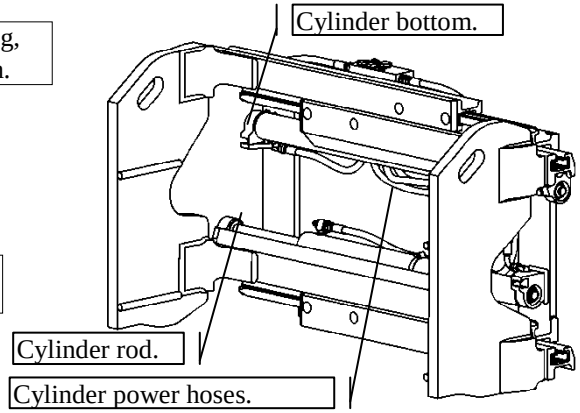

10.3.1. REPLACING GASKETS

1) To replace the “OR” gasket seal inside the regulator, use a 13-mm ISO 3318 wrench and 4-mm ISO3926 wrench.

2) Use a 19-mm ISO 3318 wrench to replace the copper seal washer.

3) Use a 12-60-mm spanner wrench and 4-mm-diameter pin to remove the cylinder plug.

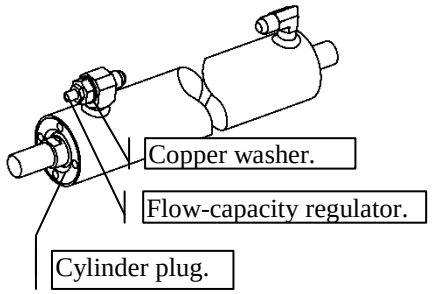

10.3.2. GASKET ASSEMBLY

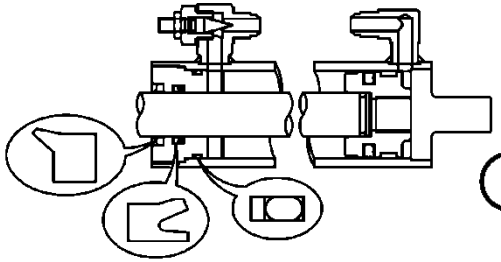

When replacing the gaskets, taken care to match the mounting direction and work in an area protected from dust.

10.4. VALVE DISASSEMBLY

Oil can spill out of the hoses. Prepare a container to collect the fluid.

You must disconnect the attachment from the truck to remove the valve.

1) Dismount the lower hooks with an ISO 3318 wrench.

2) Disconnect the flexible power hoses from the valve with a 19-mm ISO 3318 wrench.

3) Fasten no. 2 eyebolts to the ends of the frame.

4) Using UNI ISO 4479 hooks with cables, lift the attachment and rest it on the ground.

5) Disconnect the flexible hoses from the valve with a 19-mm ISO 3318 wrench.

6) Disconnect the valve block using a 6-mm ISO 3926 wrench.

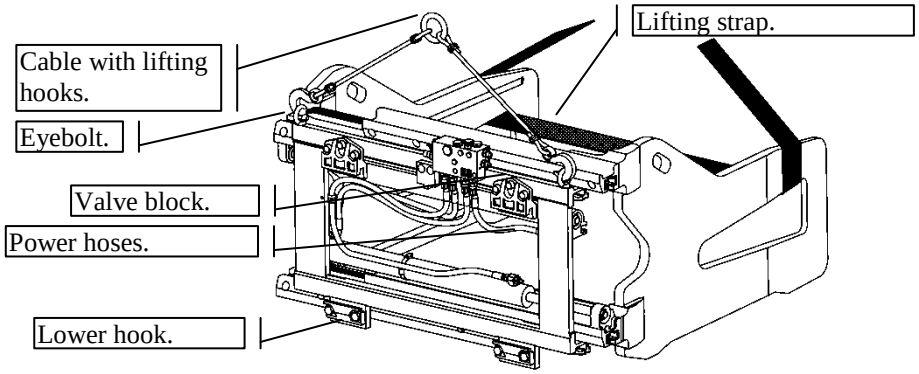

TO PUT BACK THE DISASSEMBLED PARTS, PERFORM THE PROCEDURE DESCRIBED ABOVE IN REVERSE.

10.5. SEMI-INCORPORATED SHIFTER MAINTENANCE

Before connecting-disconnecting the hoses, eliminate the pressure in the truck circuit following the manufacturer's instructions.

Oil can spill out of the hoses. Prepare a container to collect the fluid.

You must disconnect the attachment from the truck for maintenance.

10.5.1. UNHOOKING FROM THE TRUCK DISASSEMBLY

1) Dismount the lower hooks with an ISO 3318 wrench, as in point 5.4.

2) Disconnect the flexible power hoses of the truck with a 19-mm ISO 3318 wrench.

3) Fasten no. 2 eyebolts to the ends of the frame.

4) Using UNI ISO 4479 hooks with cables, lift the attachment and rest it on the ground.

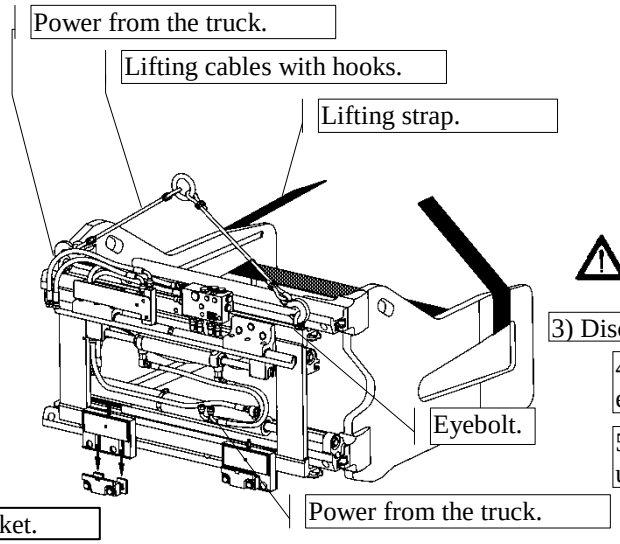

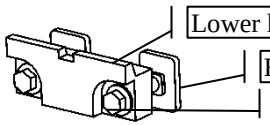

To disassemble the lower hooks, loosen the screws, avoiding the detachment of the fastening brackets, and moving downwards.

10.5.2. CYLINDER AND SLIDE BLOCK

1) Disconnect no. 2 flexible hoses from the shifting cylinder.

2) Use a 5-mm DIN 6450 punch to remove the elastic pins.

In this step, the cylinder block and support drop down.

3) Disconnect the cylinder from the support.

4) Use a 5-mm DIN 6450 punch to extract the upper guide slide blocks.

5) Disconnect the lower slide blocks using an ISO 2380 screwdriver.

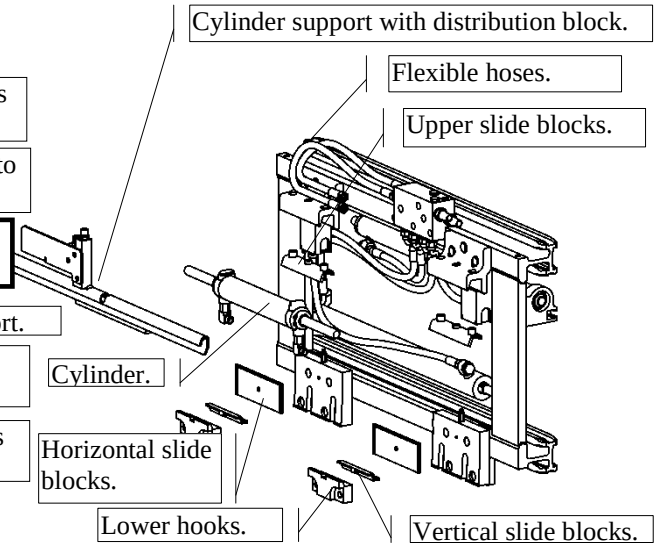

10.5.3. SLIDE BLOCK CHECK

Replace the slide blocks if there is breakage or permanent deformation or if their thickness at S1 is less than 2 mm; S2 3 mm and S3 3 mm.

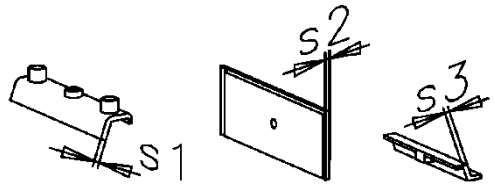

TO PUT BACK THE DISASSEMBLED PARTS, PERFORM THE PROCEDURE DESCRIBED ABOVE IN REVERSE.

To mount the lower hooks, perform a "HOOK ADJUSTMENT"

10.5.4. REPLACING GASKETS

Turn the plug until it is completely out of the lock ring.

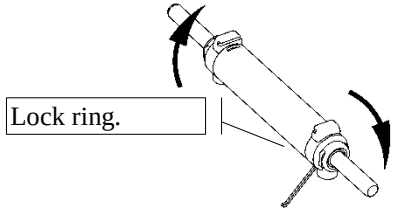

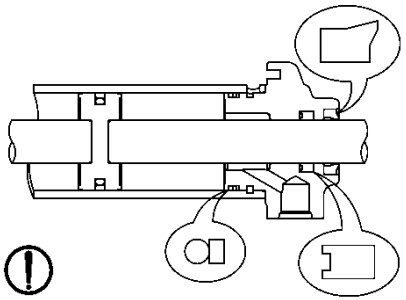

When replacing the gaskets, taken care to match the mounting direction and work in an area protected from dust.

10.6. ROTATING PLATE MAINTENANCE

Before connecting-disconnecting the hoses, eliminate the pressure in the truck circuit following the manufacturer's instructions.

Oil can spill out of the hoses. Prepare a container to collect the fluid.

You must disconnect the attachment from the truck for maintenance.

10.6.1. UNHOOKING FROM THE TRUCK

1) Dismount the lower hooks with an ISO 2936 wrench.

2) Disconnect the flexible power hoses of the truck with an ISO 3318 wrench.

3) Fasten no. 2 eyebolts to the ends of the frame.

4) Remove all the rear and front hoses.

5) Using UNI ISO 4479 hooks with cables, lift the attachment and rest it on the ground as shown to the side.

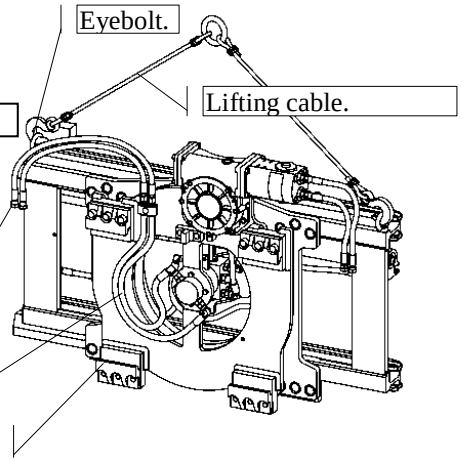

10.6.2. DISCONNECTING THE CLAMP FRAME

1) Remove the no. 12 screws fastening the frame to the rotating cover using an ISO 3318 wrench.

2) Use lifting straps to remove the frame from the clamp.

The frame can be removed with or without the presence of the cylinders.

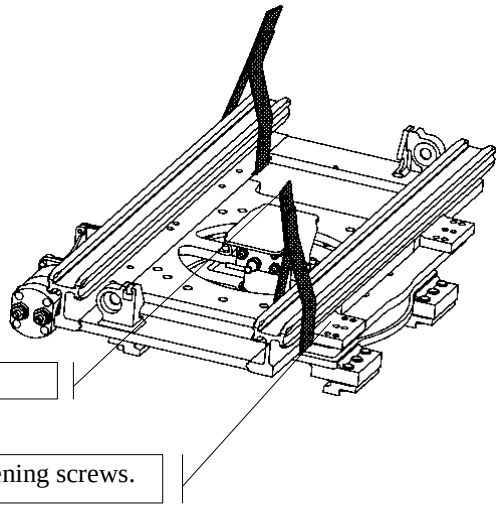

10.6.3. DISCONNECTING THE ROTATING COVER

1) Remove the swivel joint stop with no. 2 fastening screws using an ISO 2936 wrench.

2) Remove the rotating cover fastening screws with an ISO 2936 wrench.

2) Use lifting straps to remove the cover, taking care not to hit the valve block.

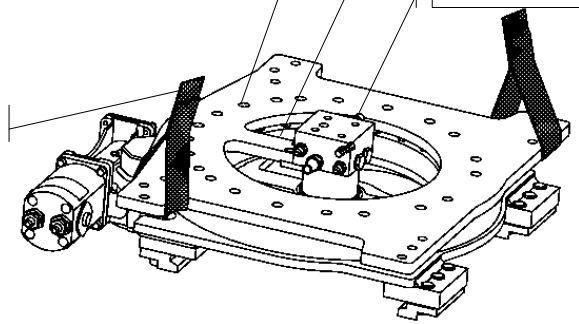

10.6.4. GASKET SEAL REPLACEMENT

1) Remove the worn gasket, if necessary, using an ISO 2380 screwdriver.

2) Use pressure to insert the new gasket seal in the slot after cleaning out any residues.

3) Note the mounting direction of the gasket seal.

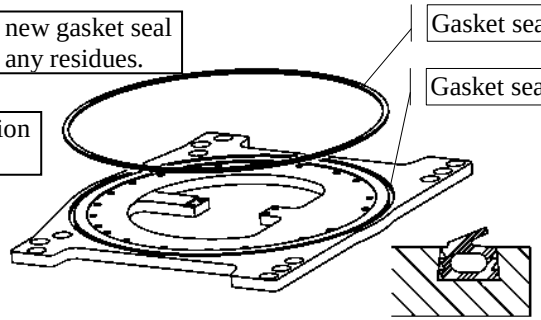

The gasket seal still works even if the ends are not glued.

10.6.5. DISCONNECTING THE TOOTHED BEARING

1) Remove the fastening screws with an ISO 3318 wrench.

2) Fasten no. 2 UNI 2947 eyebolts as shown.

3) Use UNI ISO 4479 hooks with cables to remove the toothed bearing.

Eyebolt threading	Capacity in tons.
M 12	2.0
M 10	2.5
M 12	3.5-4.5

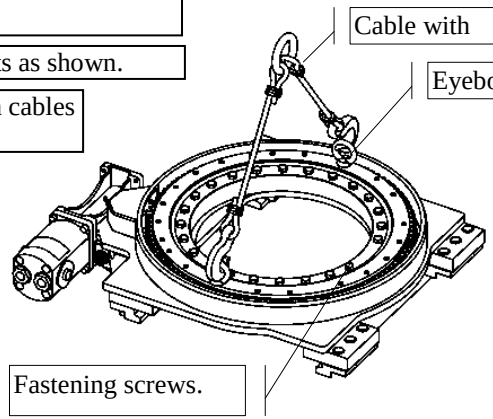

10.6.6. DISCONNECTING THE GEARMOTOR

1) Remove the gearmotor fastening screws with an ISO 2936 wrench.

2) Use lifting straps with a capacity of up to 2.5 tons to remove the gearmotor.

2) To remove the gearmotor used eyebolts with a capacity of 3.5 to 5.5 tons attached in the holes provided.

While it is being handled, the balance of the gearmotor can be precarious.

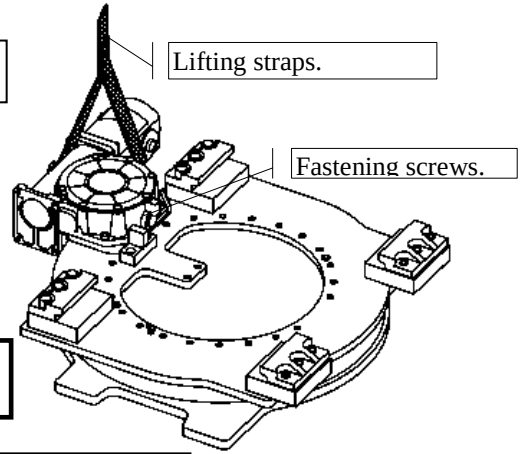

TO PUT BACK THE DISASSEMBLED PARTS, PERFORM THE PROCEDURE DESCRIBED ABOVE IN REVERSE.

10.6.7. TOOTHED BEARING ASSEMBLY

When positioning and mounting the toothed bearing, check that the reference pins are perfectly inserted in the holes of the bearing and the holes of the base frame.

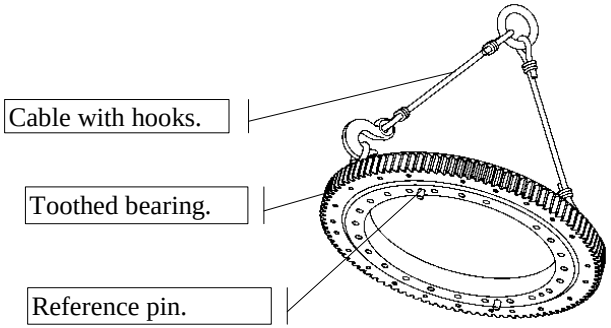

10.6.8. SCREW TIGHTENING PROCEDURE

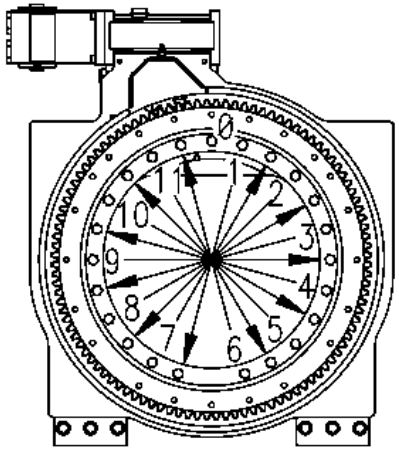

1)Tighten the screws with about ¼ of the N/m force, with opposing torques, indicated by number and arrow, following the sequence:

2) Repeat the tightening in sequence using the complete force as shown in the table.

10.6.9. WRENCH DIMENSIONS AND TIGHTENING FORCES

Tipping capacity	Rotating cover		Toothed bearing		Gear motor	
	mm	N/m	mm	N/m	mm	N/m
2.0	8	79	8	79	8	79
2.5	10	136	10	136	8	79
3.5	10	136	10	136	10	136
4.5	10	136	10	136	10	136

10.7. SWIVEL JOINT AND VALVE BLOCK

Before connecting-disconnecting the hoses, eliminate the pressure in the truck circuit following the manufacturer's instructions.

Oil can spill out of the hoses. Prepare a container to collect the fluid.

10.7.1. VALVE BLOCK DISCONNECTION

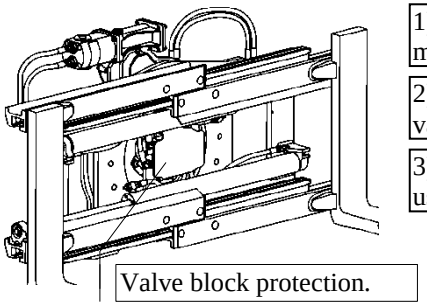

1) Remove the valve block protection using a 6-mm ISO 2936 wrench.

2) Disconnect the hydraulic hoses from the valve block using a 19-mm ISO 3318 wrench.

3) Remove the valve block fastening screws using a 6-mm ISO 2936 wrench.

When the screws are removed, the valve block drops down.

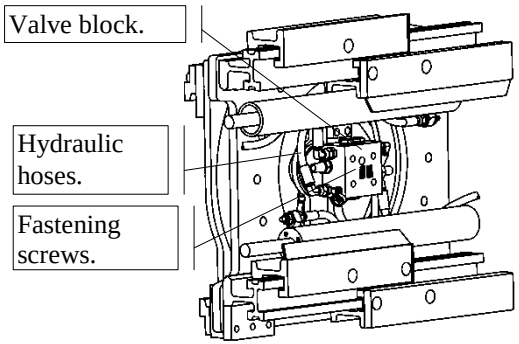

With valve block disconnected, protect the rear part and gasket seals from dust or shocks.

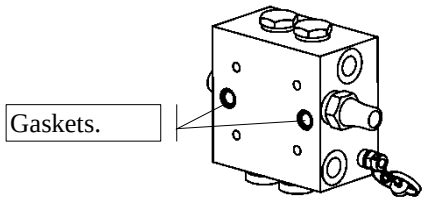

10.7.2. SWIVEL JOINT DISASSEMBLY

1) Remove the swivel joint stop using a 6-mm ISO 2936 wrench.

2) Slide the swivel part of the joint forwards to make the gasket seals accessible.

Protect the fixed pin and gasket seals from dust or shocks.

The gasket seals can be replaced without disassembling the fixed pin of the joint.

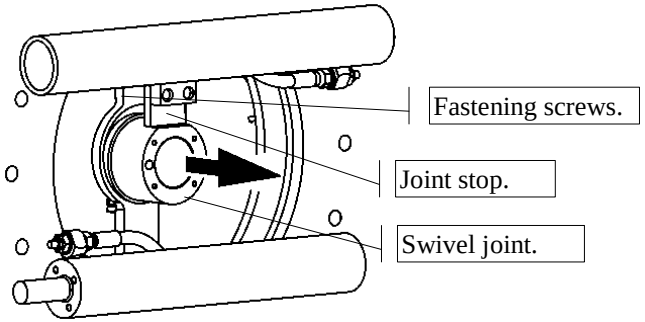

10.7.3. FIXED PIN DISASSEMBLY

To disassemble the fixed pin of the swivel joint, you must disconnect the attachment from the truck.

1) Disconnect the hydraulic hoses and fittings fro the pin using a 19-mm ISO 3318 wrench.

2) Remove the fixed pin fastening screws using a 6-mm ISO 2936 wrench.

3) Push the pin of the swivel joint forwards and slide off.

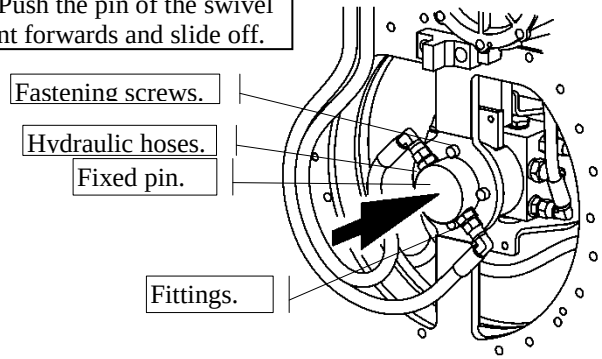

10.7.4. REPLACING GASKETS

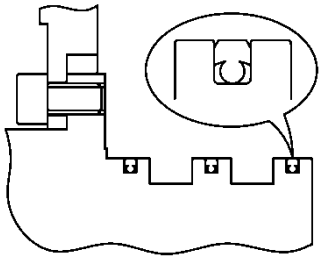

When replacing the gaskets, taken care to match the mounting direction and work in an area protected from dust.

TO PUT BACK THE DISASSEMBLED PARTS, PERFORM THE PROCEDURE DESCRIBED ABOVE IN REVERSE.

11. TROUBLESHOOTING

11.1. ROTATING PLATE

Does not rotate or rotates too slowly.	Insufficient oil pressure and/or flow.	Check and/or adjust the truck's hydraulic pump.
	Obstructions or breakage in the hydraulic circuit.	Remove the obstruction or replace the damaged hose.
	Residual air in the hydraulic circuit.	Check the oil level in the forklift's tank. Remove the residual air in the circuit.
	Hydraulic motor worn.	Replace the motor.
	Load too uncentred and/or heavier than the capacity indicated on the nameplate.	Check the load and its position with respect to the centre of rotation.
Load jerks forward when passing the upper neutral point.	Load too uncentred and/or heavier than the capacity indicated on the nameplate.	Check the load and its position with respect to the centre of rotation.
	Hydraulic motor worn.	Replace the motor.
	Gearmotor gears worn.	Replace the gears.
Excessive noise or unusual vibration.	Obstructions in the hydraulic circuit.	Remove the obstruction or replace the flexible hose.
	Insufficient oil flow.	Check and/or adjust the truck's hydraulic pump.

11.2. SEMI-INCORPORATED SHIFTING

Side shifting slow, irregular or blocked.	Insufficient oil pressure and/or flow.	Check and/or adjust the hydraulic pump and oil level in the tank of the truck. Check and adjust the attachment's valve.
	Residual air in the hydraulic circuit.	Check the oil level in the forklift's tank. Remove the residual air in the circuit.
	Hydraulic pump worn.	Replace the truck's hydraulic pump.
	Obstructions or breakage in the hydraulic circuit.	Check the hoses and connections of the hydraulic power plant; remove the obstructions and replace damaged hoses.
	Oil oozing in cylinders or valve.	Replace the cylinder gaskets or replace the valve.
	Excessive friction between the slide block guides.	Check the slide blocks, the integrity of the guides, remove any deformations, clean and grease.

11.3. CLAMP

Clamping force insufficient with slipping or loss of load.	Insufficient oil pressure and/or flow.	Check and/or adjust the hydraulic pump and oil level in the tank of the truck. Check and adjust the attachment's valve.
	Residual air in the hydraulic circuit.	Check the oil level in the forklift's tank. Remove the residual air in the circuit.
	Hydraulic pump worn.	Replace the truck's hydraulic pump.
	Obstruction or leaks in the hydraulic circuit.	Check the hoses and connections of the hydraulic power plant of the truck-attachment; remove the obstructions or leaks, replacing damaged hoses.
	Oil oozing in cylinders or valve.	Replace the cylinder gaskets or replace the valve.
	Surface of the jaw, in contact with the load, worn.	Restore the initial state of the surface or replace the jaw.
Load damaged after clamping.	Pressure limiting valve with adjusted to excessive force.	Check and adjust valve.
	Pressure limiting valve malfunction.	Replace valve.
	Surface of the jaw, in contact with the load, worn.	Restore the initial state of the surface or replace the jaw.
The jaws close or open slowly or irregularly.	Insufficient oil pressure and/or flow.	Check and/or adjust the hydraulic pump and oil level in the tank of the truck. Check and adjust the attachment's valve.
	Residual air in the hydraulic circuit.	Check the oil level in the forklift's tank. Remove the residual air in the circuit.
	Hydraulic pump worn.	Replace the truck's hydraulic pump.
	Obstructions or breakage in the hydraulic circuit.	Remove the obstruction or replace the damaged hose.
	Oil oozing in cylinders or valve.	Replace the cylinder gaskets or replace the valve.
	Excessive friction between the sliding guides.	Clean and grease. Check the integrity of the guides and remove any deformations. Check and/or replace the slide blocks.
	Flow-capacity limiter of the cylinder closed too much.	Adjust as shown in the point “SPEED AND SYNCHRONISM”
	Regeneration circuit not adjusted.	Adjust as shown in the point “SPEED AND SYNCHRONISM”
Side shifting slow, irregular or blocked.	Insufficient oil pressure and/or flow.	Check and/or adjust the hydraulic pump and oil level in the tank of the truck. Check and adjust the attachment's valve.
	Residual air in the hydraulic circuit.	Check the oil level in the forklift's tank. Remove the residual air in the circuit.
	Hydraulic pump worn.	Replace the truck's hydraulic pump.
	Obstructions or breakage in the hydraulic circuit.	Remove the obstruction or replace the damaged hose.
	Oil oozing in cylinders or valve.	Replace the cylinder gaskets or replace the valve.
	Excessive friction between the sliding guides.	Check the slide blocks, the integrity of the guides, remove any deformations, clean and grease.
	Flow-capacity limiter of the cylinder closed too much.	Adjust as shown in the point “SPEED AND SYNCHRONISM”
Loss of load at the end of shifting.	Regeneration circuit not adjusted.	Adjust as shown in the point “SPEED AND SYNCHRONISM”

IN THE CASE OF PROBLEMS NOT DESCRIBED ABOVE, CONTACT OUR SERVICE DEPARTMENT

12. NOISE

THE SPECIFICATIONS THAT FOLLOW APPLY TO THE TRUCK-ATTACHMENT UNIT.

- Acoustic pressure level of the weighted emission A in the work place, if it exceeds 70 dB(A); if this level does not exceed 70 dB(A), it must be indicated.

-The maximum value of the instantaneous weighted acoustic pressure C in the work place, if it exceeds 63 Pa (130 dB with respect to 20 µPa).

-Weighted acoustic power level A emitted by the machine, if the weighted acoustic pressure level A in the work place exceeds 80 dB(A).

13. RECYCLING

If replaced pieces are scrapped,
their disposal must be differentiated depending on the nature of the material and in conformity with the law governing the disposal of solid industrial waste of solid industrial waste.
NOTE: Pieces not listed in the table to the side are steel.

Pallet for transport	Wood
Belts for fixing and protective covering for shipping	Polyester and heat-shrink
Cylinder plugs	Cast iron
Guide slide blocks	Nylon
Pipes/fittings	Polyester/steel
Gaskets	Polyurethane and NBR
Paint	Polyester epoxy
Gearmotor and grease	Dispose of in conformity with local law

14. WARRANTY

The manufacturer warrants all its products for 12 months or 2,000 working hours (which ever comes first) from the date of shipment.
If used for more than 8 hours per day, the warranty period will be reduced proportionally.
The warranty is limited to the replacement, FOB the manufacturer's plant, of those parts it acknowledges to be defective in materials or workmanship; it does not include labour or travel to replace the parts.
In addition, it is understood that the warranty is void if the problem is due to inappropriate use of the product, if it was not put into service following the manufacturer's instructions or if other than original replacement parts were used for modifications and/or repairs.
The attachment is not warranted for uses that exceed the capacities shown on the plate and in the documentation.
All attachments are covered by insurance against any damage to third parties caused by defective pieces or their incorrect functioning; damage caused by incorrect or improper use is excluded.

15. FACSIMILE OF CERTIFICATE OF CONFORMITY

Dichiarazione CE di Conformità

Noi NOME COSTRUTTORE

INDIRIZZO COSTRUTTORE

XXXXXXXXXXXXXXXXX

Dichiariamo sotto la nostra esclusiva responsabilità che il prodotto:

Tipo YYYYYYYYYYYYYYYY

Marca XXXXXXXXXXXXXX

Modello WWWWWWWWWw

Matricola JJJJJJJJJJJ

Anno di fabbricazione VVVV

è conforme alle disposizioni della Direttiva Macchine 2006/42/CE
e alle disposizioni della norma EN 1726-2

Persona autorizzata a costituire il fascicolo tecnico
Nome Pietro
Cognome Foroni
Posizione Direttore Ufficio Tecnico
Indirizzo 29027 Casoni di Podenzano - Piacenza (Italy)

Persona autorizzata a redigere la dichiarazione
Nome Claudio
Cognome Carnieletto
Posizione Direttore Assicurazione Qualità e Post Vendita

Piacenza, 10 dicembre 2009